Model

1996B Revision

1.1 Updated April 21, 2017

Technical Manual

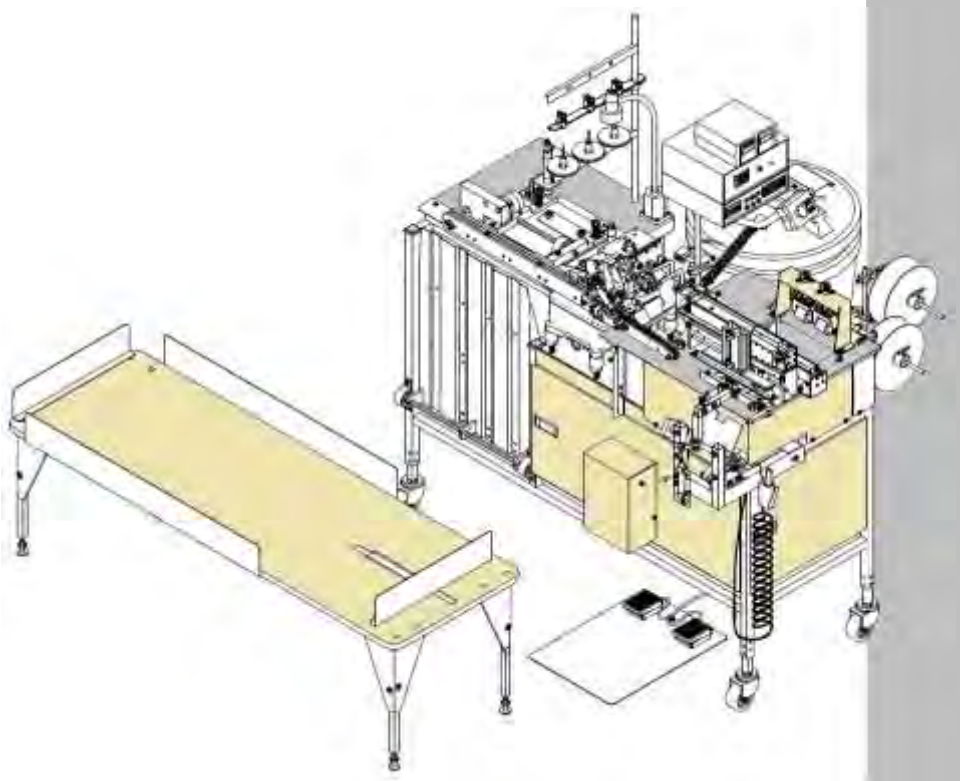

362 Industrial Park Drive

Lawrenceville, GA 30046

+1 (770-963) 7369

www.atlatt.com

Atlanta Attachment Company, Inc.

Confidential and Proprietary Information

IMPORTANT

It is important to read and understand the information contained within this manual before attempting to operate the machine. Atlanta Attachment Co., Inc. shall not be held liable for damage resulting from misuse of the information presented within, and reserves the right to change the information contained within, without prior notification.

Patents & Patents Pending

The sale of this product does not sell or otherwise transfer any license or other rights under any U.S. Patent or other corresponding foreign patent.

This equipment is manufactured under one or more of the following patents:
4,280,421 ● 4,432,294 ● 4,466,367 ● 4,644,883 ● 5,134,947 ● 5,159,889 ● 5,203,270 ● 5,373,798 ● 5,437,238 ● 5,522,332 ● 5,524,563 ● 5,562,060 ● 5,634,418 ● 5,647,293 ●5,657,711 ● 5,743,202 ● 5,865,135 ● 5,899,159 ● 5,915,319 ● 5,918,560 ● 5,924,376 ●5,979,345 ● 6,035,794 ● 6,055,921 ● 6,202,579 ● 6,279,869 ● 6,295,481 ● 6,494,225 ●6,523,488 ● 6,574,815 ● 6,802,271 ● 6,834,603 ● 6,968,794 ● 6,994,043 ● 7,543,364 ●7,574,788 ● 7,647,876 ● 7,735,439

Foreign Patents: 9-520,472 ● 0,537,323 ● 92,905,522.6 ● 96,936,922.2 ● 2,076,379 ● 2,084,055
Other U.S. and Foreign Patents Pending.

Contents

Safety Instruction

This part of the Instruction Material is provided for the safe use of your equipment. It contains important information to help work safely with the unit and describes the dangers inherent in machinery. Some of these dangers are obvious, while others are less evident.

Mandatory Information

All persons operating and/or working on the Workstation should read and understand all parts of the Safety Instructions. This applies, in particular, for persons who only operate and/or work on the unit occasionally (e.g. for maintenance and repair). Persons who have difficulty reading must receive particularly thorough instruction.

Scope of the Instruction Material

The Instruction Material comprises:

- Safety information
- Operator Instructions
- Electrical and Pneumatic diagrams

And may also include;

- A list of recommended spare parts
- Instruction Manual(s) for components made by other manufacturers
- The layout and installation diagram containing information for installation

Intended Use

Our machines are designed and built in line with the state of the art and the accepted safety rules. However, all machines may endanger the life and limb of their users and/or third parties and be damaged or cause damage to other property, particularly if they are operated incorrectly or used for purposes other than those specified in the Instruction Manual.

Exclusion of Misuse

Non-conforming uses include, for example, using the equipment for something other than it was designed for, as well as operation without duly installed safety equipment. The risk rests exclusively with the end user.

Conforming use of the machine includes compliance with the technical data, information and regulations in all parts of the complete Instruction Material, as well as compliance with the maintenance regulations. All local safety and accident prevention regulations must also be observed.

Liability

The machine should only be operated when in perfect working order, with due regard for safety and the potential dangers, as well as in accordance with the Instruction Material. Faults and malfunctions capable of impairing safety should be remedied immediately. We cannot accept any liability for personal injury or property damage due to operator errors or non-compliance with the safety instructions contained in this booklet. The risk rests exclusively with the end user.

The Instruction Material should always be kept near the machine so that it is accessible to all concerned.

The local, general, statutory and other binding regulations on accident prevention and environmental protection must also be observed in addition to the Instruction Material. The operating staff must be instructed accordingly. This obligation also includes the handling of dangerous substances and provision/use of personal protective equipment.

The Instruction Material should be supplemented by instructions, including supervisory and notification duties with due regard for special operational features, such as the organization of work, work sequences, the personnel deployed, etc.
The personnel's awareness of the dangers and compliance with the safety regulations should be checked at irregular intervals.

Choice and Qualification of Personnel

Ensure that work on the machine is only carried out by reliable persons who have been appropriately trained for such work - either within the company, by our field staff or at our office - and who have not only been duly appointed and authorized, but are also fully familiar with the local regulations. Work on the machine should only be carried out by skilled personnel, under the management and supervision of a duly qualified engineer.
This not only applies when the machine is used for production, but also for special work associated with its operation (start-up and maintenance), especially when it concerns work on the hydraulic or electrical systems, as well as on the software/serial bus system.

Training

Everyone working on or with the machine should be duly trained and informed with regard to correct use of the safety equipment, the foreseeable dangers which may arise during operation of the machine and the safety precautions to be taken. In addition, the personnel should be instructed to check all safety mechanisms at regular intervals.

Responsibilities

Clearly define exactly who is responsible for operating, setting-up, servicing and repairing the machine. Define the responsibilities of the machine operator and authorize him to refuse any instructions by third parties if they run contrary to the machine's safety. This applies in particular for the operators of machines linked to other equipment. Persons receiving training of any kind may only work on or with the machine under the constant supervision of an experienced operator. Note the minimum age limits permitted by law.

A Word to the Operator

The greatest danger inherent in our machines:
is that of fingers, hands or loose clothing being drawn into a machine by live, coasting or rotating tools or assemblies or of being cut by sharp tools or burned by hot elements.

Always be conscious of these dangers!

Safety Equipment on the Machines

All machines are delivered with safety equipment, which shall not be removed or bypassed during operation.

The correct functioning of safety equipment on machines and systems should be checked every day and before every new shift starts, after maintenance and repair work, when starting up for the first time and when restarting (e.g. after prolonged shutdowns).

If safety equipment has to be dismantled for setting-up, maintenance or repair work, such safety equipment shall be replaced and checked immediately upon completing the maintenance or repair work.
All protective mechanisms shall be fitted and fully operational whenever the machine is at a standstill or if it has been shut down for a longer period of time.

Damage

If any changes capable of impairing safety are observed in the machine or its mode of operation, such as malfunctions, faults or changes in the machine or tools, appropriate steps must be taken immediately, the machine switched off and a proper lockout tagout procedure followed. The machine should be examined for obvious damage and defects at least once per shift. Damage found shall be immediately remedied by a duly authorized person before resuming operation of machine.
The machine should only be operated when in perfect working order and when all protective mechanisms and safety equipment, such as detachable protective mechanisms, emergency STOP systems, etc. are in place and operational.

Faults or Errors

The machine must be switched off and all moving or rotating parts allowed to come to a standstill and secured against accidental restart before starting to remedy any faults or errors.

Signs on the Machine

Safety and danger signs on the machine should be observed and checked at regular intervals to ensure that they are complete and undamaged. They should be clearly visible and legible at all times.
Clothing, Jewelry, Protective Equipment
Long loose hair, loose-fitting clothes, gloves and jewelry, including rings, should be avoided in order to avoid injuries due to being caught, drawn in and wound up inside the machine.

Protective Eyewear

Protective eyewear that has been tested by the local authorities should be worn whenever there is a possibility of loose or flying objects or particles such as when cleaning the machine with compressed air.

Tools

Always count the number of tools in your possession before starting work on the machine. This will allow you to check that no tools have been left behind inside the machine. Never leave a tool in the machine while working.

Oils, Lubricants, Chemicals

Note the applicable safety regulations for the product used.

No Smoking, Fire, Explosion Hazard

Smoking and open flame (e.g. welding work) should be prohibited in the production area due to the risk of fire and explosions.

Workplace

A clear working area without any obstructions whatsoever is essential for safe operation of the machine. The floor should be level and clean, without any waste.
The workplace should be well lit, either by the general lighting or by local lights.

Emergency STOP

The emergency STOP buttons bring all machine movements to a standstill. Make sure you know exactly where they are located and how they work. Try them out. Always ensure easy access to the nearest emergency STOP button while working on the machine.

First Aid

1. Keep calm even when injured.
2. Clear the operator from the danger zone. The decision of what to do and whether to seek additional assistance rests entirely with you, particularly if someone has been trapped.
3. Give First Aid. Special courses are offered by such organizations as the employers' liability insurance association. Your colleagues should be able to rely on you and vice versa.
4. Call an ambulance. Do you know the telephone numbers for the ambulance service, police and fire service?

Important Notices

Reporting and Fighting Fires

Read the instructions posted in the factory with regard to reporting fires and the emergency exits. Make sure you know exactly where the fire extinguishers and sprinkler systems are located and how they are operated. Pass on the corresponding information to the firemen when they arrive. Ensure there are enough signs to avoid fire hazards.

The following fire extinguishers may be used:
- Dry powder extinguishers, ABC fire-extinguishing powder.
- Carbon dioxide fire extinguishers to DIN 14461 for electronic components. Great care must be exercised when using carbon dioxide fire extinguishers in confined, badly ventilated rooms (see DIN 14406 and 14270).

Isolate the machine from the power supply if a fire breaks out. Do not use water on burning electrical parts until it is absolutely certain that they have been completely disconnected from the power supply. Burning oils, lubricants, plastics and coatings on the machine can give off gases and vapors that may be harmful to your health.
A qualified person should be consulted to repair the damage after a fire.

Electrical Power Supply

Before undertaking any maintenance or repair work on the machine, switch off the electrical power to the machine at the main source and secure it with a padlock so that it cannot be switched on again without authorization.
In practice, this may mean that the technician, electrician and operator all attach their own padlock to the master switch simultaneously so that they can carry out their work safely. Locking extension plates should be available for multiple locks if required. The primary purpose for a lockout/tagout procedure is to protect workers from injury caused by unexpected energizing or start-up of equipment.
Energy sources (electrical/pneumatic/hydraulic, etc.) for the equipment shall be turned off or disconnected and the switches locked or labeled with a warning tag. It is the responsibility of the employer to establish control procedures. Follow lockout/tagout procedures before, setup and/or any service or maintenance work is performed, including lubrication, cleaning or clearance of jams.

Caution: The machine is still not completely de-energized even when the master switch is off.

- Electricity - The machine is always isolated from the electrical power supply whenever the master switch has been switched off. However, this does not apply for the power supply in the control cabinet, nor for equipment that does not draw its power via the master switch.

- Pneumatic / hydraulic energy - Almost all our machines carry compressed air. In addition to switching off the master switch, the air supply must also be disconnected and the machine checked to ensure it is depressurized before starting any work on the machine; otherwise the machine may execute uncontrolled movements.

- Kinetic energy - Note that some motors or spindles, for example, may continue to run or coast run on after being switched off.
- Potential energy - Individual assemblies may need to be secured if necessary for repair work.

Delivery of the Machine/Packaging

Note any markings on the packaging, such as weights, lifting points and special information. Avoid temperature fluctuations. Condensation may damage the machine.

Transport Damage

The packaging and machine must immediately be examined for signs of damage in transit. Such damage must be reported to the shipper/transporter within the applicable time limits. Contact Atlanta Attachment Company and/or your transport insurer immediately, if signs of damage are visible. Never operate a damaged machine.

Interim Storage

If the machine has to be stored temporarily, it must be oiled or greased and stored in a dry place where it is protected from the weather in order to avoid damage. A corrosion-inhibiting coating should be applied if the machine has to be stored for a longer period of time and additional precautions taken to avoid corrosion.

Transporting the Machine

Disconnect the machine from all external connections and secure any loose assemblies or parts. Never step under a suspended load. When transporting the machine or assemblies in a crate, ensure that the ropes or arms of a forklift truck are positioned as close to the edge of the crate as possible. The center of gravity is not necessarily in the middle of the crate. Note the accident prevention regulations, safety instructions and local regulations governing transport of the machine and its assemblies.

Only use suitable transport vehicles, hoisting gear and load suspension devices that are in perfect working order and of adequate carrying capacity. Transport should only be entrusted to duly qualified personnel.

Never allow the straps to rest against the machine enclosure and never push or pull sensitive parts of the machine. Ensure that the load is always properly secured. Before or immediately after loading the machine, secure it properly and affix corresponding warnings.
All transport guards and lifting devices must be removed before the machine is started up again. Any parts that are to be removed for transport must be carefully refitted and secured before the machine is started up again.

Workplace Environment

Our machines are designed for use in enclosed rooms: Permissible ambient temperature approx. 5 - 40 °C (40 - 104 °F). Malfunctions of the control systems and uncontrolled machine movements may occur at temperatures outside this range.
Protect against climatic influences, such as electrostatic charges, lightning strikes, hail, storm damage, high humidity, salinity of the air in coastal regions.
Protect against influences from the surroundings: no structure-borne vibrations, no grinding dust, or chemical vapors.
Protect against unauthorized access.
Ensure that the machine and accessories are set up in a stable position.
Ensure easy access for operation and maintenance (Instruction Manual and layout diagram); also verify that the floor is strong enough to carry the weight of the machine.

Local Regulations

Particular attention must be paid to local and statutory regulations, etc. when installing machines and the plant (e.g. with regard to the specified escape routes). Note the safety zones in relation to adjacent machines.

Maintenance

General Safety Instructions

The machine shall be switched off, come to a standstill and be secured so that it cannot be switched on again inadvertently before starting any maintenance work whatsoever. Use proper lockout/tagout procedures to secure the machine against inadvertent startup.
Remove any oil, grease, dirt and waste from the machine, particularly from the connections and screws, when starting the maintenance and/or repair work. Do not use any corrosive-cleaning agents. Use lint-free rags.
Retighten all screw connections that have to be loosened for the maintenance and repair work.
Any safety mechanisms that have to be dismantled for setting-up, maintenance or repair purposes must be refitted and checked immediately after completing the work.

Maintenance, Care, Adjustment

The activities and intervals specified in the Instruction Manual for carrying out adjustments, maintenance and inspections must be observed and parts replaced as specified.
All hydraulic and pneumatic lines should be examined for leaks, loose connections, rubbing and damage whenever the machine is serviced. Any defects found must be remedied immediately.

Waste, Disassembly, Disposal

Waste products should be cleared from the machine as soon as possible as not to create a fire hazard.
Ensure that fuels and operating lubricants, as well as replacement parts are disposed of in a safe and ecologically acceptable manner. Note the local regulations on pollution control.
When scrapping (disassembling) the machine and its assemblies, ensure that these materials are disposed of safely. Either commission a specialist company familiar with the local regulations or note the local regulations when disposing of these materials yourself. Materials should be sorted properly.

Repair

Replacement Parts
We cannot accept any liability whatsoever for damage due to the use of parts made by other manufacturers or due to unqualified repair or modification of the machine.

Repair, Electrical

The power supply must be switched off (master switch off) and secured so that it cannot be switched on again inadvertently before starting any work on live parts.
Those parts of the machine and plant on which inspection, maintenance or repair work is to be carried out must be isolated from the power supply, if specified. The isolated parts must first be checked to determine that they are truly de-energized before being grounded and short-circuited. Adjacent live parts must also be isolated.
The protective measures implemented (e.g. grounding resistance) must be tested before restarting the machine after all assembly or repair work on electric parts.
Signal generators (limit switches) and other electrical parts on the safety mechanisms must not be removed or bypassed. Only use original fuses or circuit overloads with the specified current rating. The machine must be switched off immediately if a fault develops in the electrical power supply.
The electrical equipment of our machines must be checked at regular intervals and any defects found must be remedied immediately.
If it is necessary to carry out work on live parts, a second person should be on hand to operate the emergency OFF switch or master switch with voltage release in the event of an emergency. The working area should be cordoned off and marked by a warning sign. Only use electrically insulated tools.

Ventilation/Hazardous Gases

It is the end users responsibility to ensure adequate ventilation is provided to exhaust any and all noxious or hazardous gases that may be present in the working environment.
Hydraulic and Pneumatic Systems
Work on hydraulic or pneumatic equipment shall only be carried out by persons with training, knowledge and experience of hydraulic systems. Pressure lines shall be depressurized before starting any repair work.

General Liability

Liability for machine damage and personal injury is extinguished completely if any unauthorized conversions or modifications are undertaken. The machine must not be modified, enlarged or converted in any way capable of affecting safety without the manufacturer's prior approval.

Starting Machine Movements

Read the Instruction Manual carefully to establish which keys and functions start machine movements.

A Word to the End User

The end user has sole responsibility to enforce the use of safety procedures and guards on the machine. Any other safety devices or procedures due to local regulations should be should be retrofitted in accordance to these regulations and/or the EC Directive on the safety of machines. Operator’s position must always be readily accessible. Escape routes must always be kept clear and safety areas should be identified.

Safety Precautions

Safety should be a constant concern for everyone. Always be careful when working with this equipment. While normal safety precautions were taken in the design and manufacture of this equipment, there are some potential safety hazards.
Everyone involved with the operation and maintenance of this equipment should read and follow the instructions in this manual. Operate the equipment only as stated in this manual. Incorrect use could cause damage to the equipment or personal injury.

Safety

It is the owner's responsibility to make certain that the operator reads and understands this manual before operating this equipment. It is also the owner's responsibility to make certain that the operator is a qualified and physically able individual, properly trained in the operation of this equipment.

Specific safety warning decals are located on the equipment near the immediate areas of potential hazards. These decals should not be removed or obliterated. Replace them if they become non-readable.

- ALWAYS keep safety shields and covers in place, except for servicing.
- ALWAYS operate equipment in daylight or with adequate working lights.
- Follow daily and weekly checklists, making sure hoses are tightly secured and bolts are tightened.
- ALWAYS watch and avoid holes or deep depressions.

ALWAYS wear adequate eye protection when servicing the hydraulic system and battery.

- NEVER operate a poorly maintained machine.
- NEVER allow persons to operate this machine without proper instruction.
- NEVER put hands or feet under any part of the machine while it is running.
- NEVER attempt to make any adjustments or repairs to the machine while running. Repairs or maintenance should be performed by trained personnel only.
- NEVER work under the machine unless it is safely supported with stands, blocks or a hoist and blocks.
- NEVER touch hot parts of machine.

1. INSTALLATION

NOTE: It is important that the machine technician read this manual and is familiar with all the functions and safety concerns of the unit before Installing and operating.

1.1. Parts and Components

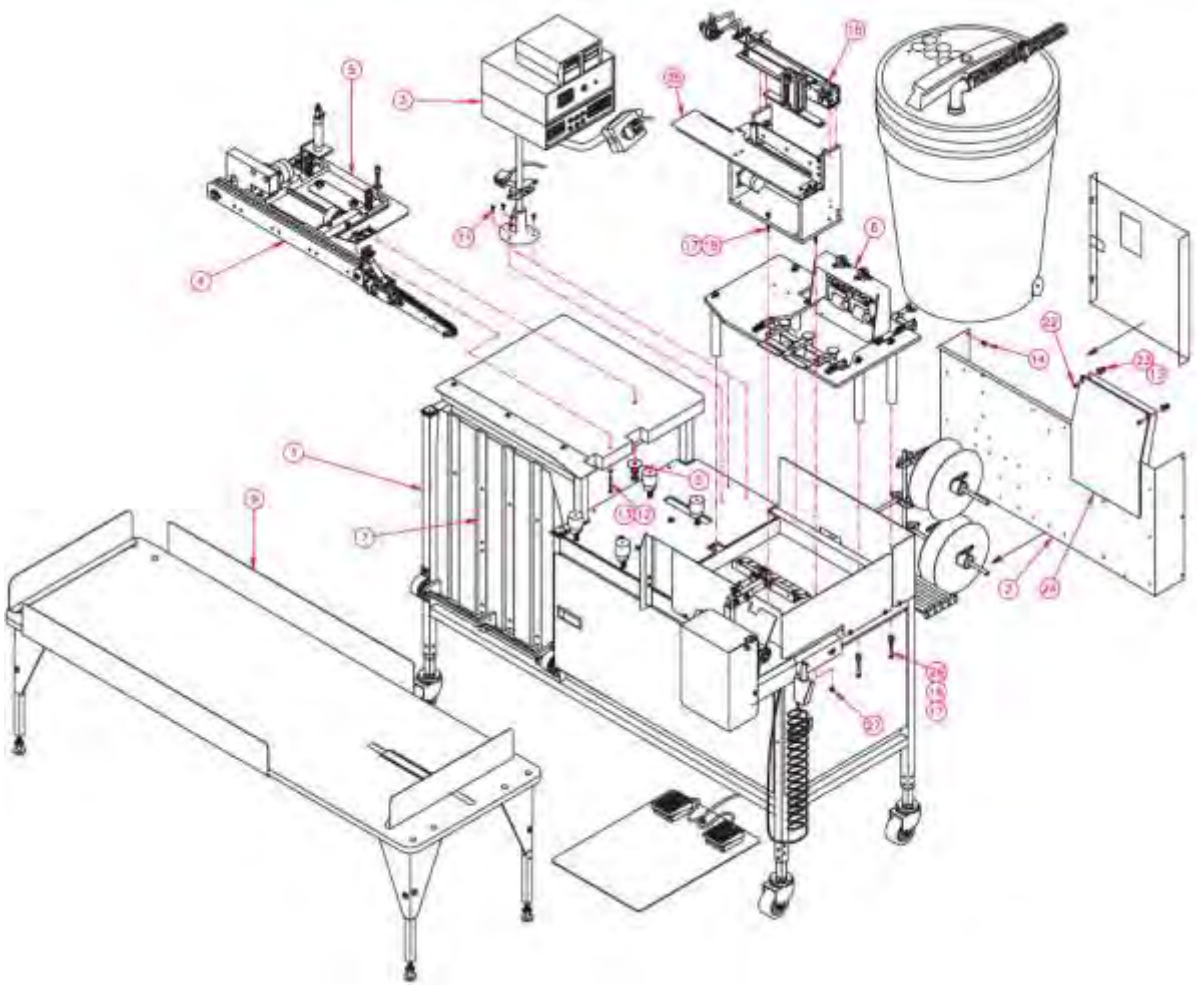

	Part No.	Description		Part No.	Description
1	1996-01C	Table, Stand & Motor	15	199610B	Transfer Sub Assembly
2	1996-03B	Pneu/Elec Box Assy	16	WWL1/4	Lock Washer
3	1996-04A	Control Box Assy	17	WWFS1/4	Washer
4	1996-05	Top Conveyor Assy	18	1996B-PD	Pneumatic Diagram
5	1996-06	Conveyor Mt Kit	19	SSHC01192	Scr. Hx Cp 1/4-20x3
6	1996-08B	Feed & Cut Assy	20	1996-WD3	Wiring Diagram
7	1996-12	Stacker Door Assy	21	1996-WD4	Wiring Diagram
8	1996-13A	Cable Package	22	SSTS98040	Scr, Tr Sl 10-32x5/8
9	1996-15	Indexing Table	23	NNK10-32	Kep Nut
10	1996-LABEL	Label Package	24	1996-038	Crincle Cloth Plate
11	SSFP01048	Scr,Fl Ph 1/4-20x3/4	25	1996-300	Guillotine Assembly
12	SSPS95128	Scr,Pn Sl 10-24x2	26	SSHC01160	Scr. Hx Cp 1/4-20x2 1/2
13	WWFS10	Washer	27	NNK1/4-20	Kep Nut
14	SSZS93032	Scr,Sh Me 10-16x1/2	AAC Drawing Number 192113C Rev. 0		

1.2. Technical Data

Voltage (v/ph/hz)	220v 1ph
Current (amps)	5
Air pressure (psi)	90
Air consumption (cfm)	10
Shipping weight (lbs)	1100
Shipping dimensions (w/l/h, inch)	96 x 55 x 60

Production: Approximately 487 pieces per hour. Estimate based on cycle time, material changeover, and machine program time.
Cycle time: Approx. 17" (43.2 cm) strip - .066 min 30" (76.2 cm) strip .086 min
Changeover time: Approx. 30 seconds, by the operator
Capacity: Width minimum 2" (5.08 cm) to 8" (20.32 cm) roll or 4"(dual roll).
Band Length: 15" (38.1 cm) to 52" (132 cm) (7 1/2" (19.05 cm) to 26" (66.04 cm) folded)
Seamer: Yamato 8003 3 thread (504 stitch)
Controls trim-off: 1/4" (6.4 mm) o 1/8" (3.2 mm)
Cut length: Programmable in 1/10" increments

Tolerances
Alignment: Side +/-1/16" (1.2mm), Ends +/-1/16" (1.2mm),
Length Repeatability:+/-1/8" (3.2 mm) (rib knit). Length Is Adjustable to Nearest 1/10 (2,5mm)
Cutting Accuracy: Within 1/8" (3.2 mm) of programmed length
Seam ply alignment: Within 1/8" (3.2 mm) obtainable

1.3. Foot print

Machine foot print is 78" x 54" (198x137 cm) Leave enough free space around to be able to open all doors and have access for maintenance.

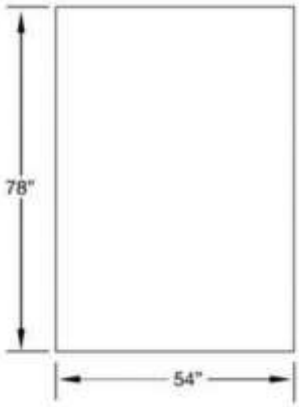

1.4. Machine Identification Label

Machine identification is located on top of the table behind the sewing head. Its contents are the machine class and the Serial Number. Ex: 218427031707
Serial number is divide as follow.
First number identify the order number 218427
Next number month of manufacturing (03)
Next number the year of manufacturing (17)
Following a correlative number 07

1.5. Machine Types & Subclasses

1966 Automatic Cuff, Collar, and Waistband Workstation

Part Number	Description	Sewing Head (XXX)				Motor		Rolls		Drawing
		Pegasus	Yamato	Juki	Rimoldi	Panasonic	Efka	Single	Double	
11996G61	AUTO COLLAR & BAND EX5204 PEGASUS	X								
11996G61A	AUTO COLLAR & BAND, PANA EX5204 PEGASUS	X				X				
11996CG61	AUTO COLLAR & BAND, PANA GUILLOTINE, S/R, PEGASUS	X				X		X		
11996CG61A	AUTO COLLAR & BAND, PANA GUILLOTINE, S/R, PEGASUS	X				X		X		
11996BG61A	AUTO COLLAR & BAND, PANA GUILLOTINE, D/R, PEGASUS	X				X			X	
11996AY23	AUTO COLLAR & BAND, PANA DUAL ROLL SET-UP, 8003 YAM		X						X	191516C
11996Y23	AUTO COLLAR & BAND 8003 YAMATO HEAD		X							191380C
11996CY23	AUTO COLLAR & BAND GUILLOTINE, S/R, YAMATO		X					X		
11996BY52	AUTO COLLAR & BAND, PANA GUILLOTINE, D/R, 8003G YAM		X			X			X	
11996BJ95	Automatic Cuff, Collar and WaiStband Workstation, with Guillotine Cutter, Juki 3904 Sewing Head			X					X	
11996AJ95	AUTO COLLAR & BAND, PANA DUAL ROLL, 3904 JUKI 8003			X		X			X	191516C
11996R33	AUTO COLLAR & BAND F27-00-1CD-07 RIMOLDI				X					191380C
11996BR33	AUTO COLLAR & BAND, PANA GUILLOTINE, D/R, RIMOLDI				X	X			X	
11996AR33	AUTO COLLAR & BAND, PANA DUAL ROLL SET-UP, RIMOLDI				X	X			X	191516C
11996CR33	AUTO COLLAR & BAND, PANA GUILLOTINE, S/R, RIMOLDI				X	X		X		

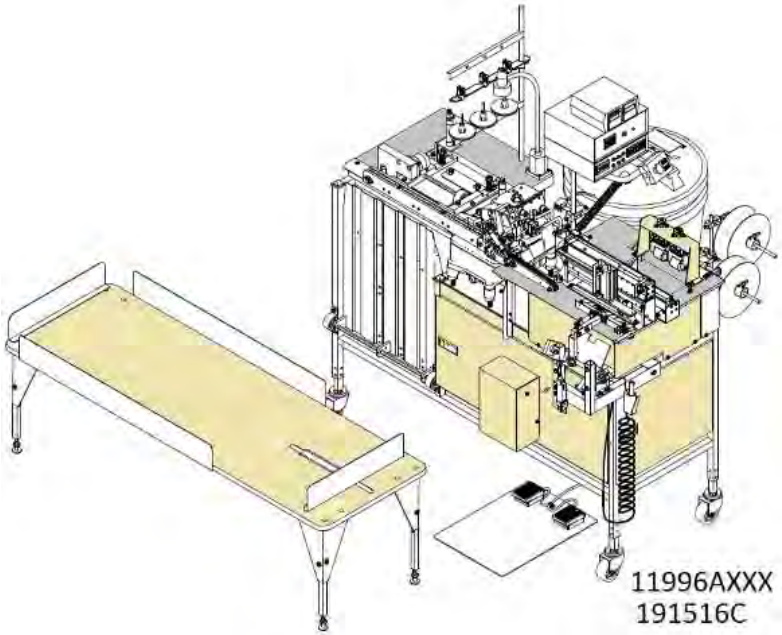

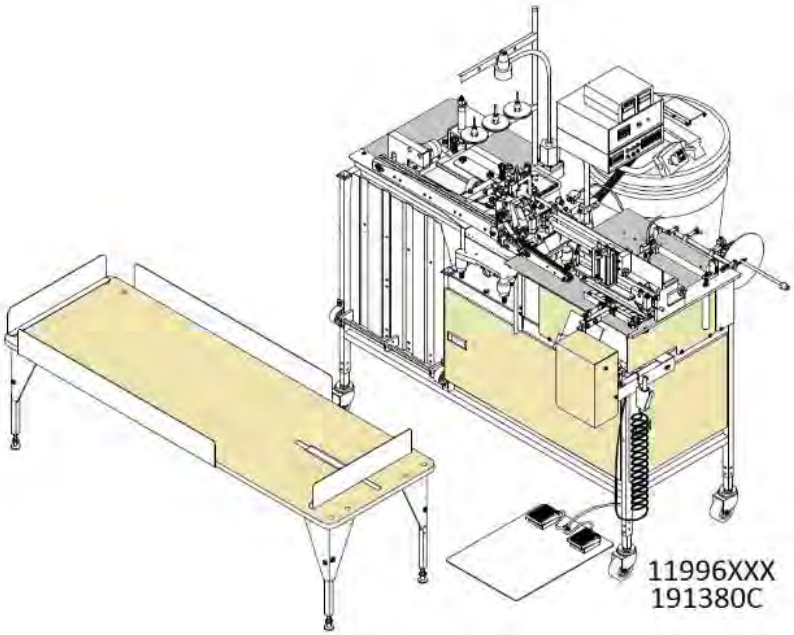

1.6. Assembly

1. Remove all shipping straps from machine.
2. Inspect the machine for any damage that may have occurred during shipping. If damage is found, report this immediately to your supervisor. Document the damage and provide details and photographs.
3. Position the machine in a desired location on a sound and reasonably level floor. Make sure that there is sufficient lighting over the machine. Remove all packing material.
4. Apply with a clean towel a light coat of oil to all black oxide parts to avoid future corrosion.

1. Wheels

After removing machine from crate remove transportation plates and install all 4 wheels on the unit

2. V-belt

If sewing head was removed before shipping, reinstall sewing head and check V-belt tension.

3. Sewing Head Lubrication

Oil may be removed before shipping. Prior to using refill and check the oil level in sewing heads. (ISO Viscosity Grade 22 part #)

Check that the oil level is in the operating range.

4. Thread Stand

Install thread stand according to the picture.

5. Roll Holders

Install roll holders brackets according to picture A. For Collars operations use configuration B, for Waistbands operations use configuration C

A

B

C

6. Waste System

Connect the waste tubes.

7. Stacker

Install Stacker and connect according to the pictures.

8. Thread Detectors

- Assemble all thread detectors according to the pictures


- Connect thread detector to the unit following steps A to F

A

B

C

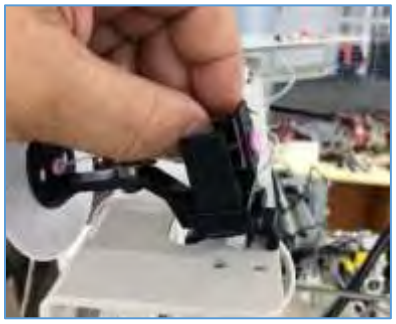

D

E

F

- Pass thread through detector picture A and the slot on the tension post as shown on B.

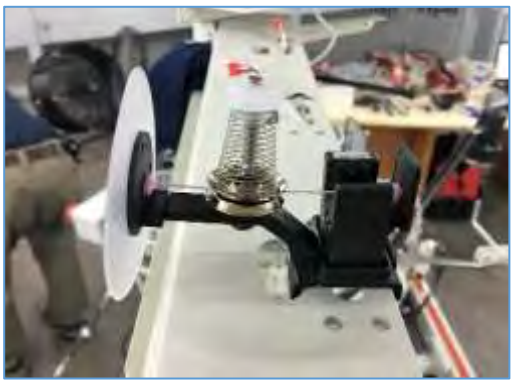

A

B

9. Control Boxes

Install and connect the control boxes as shown.

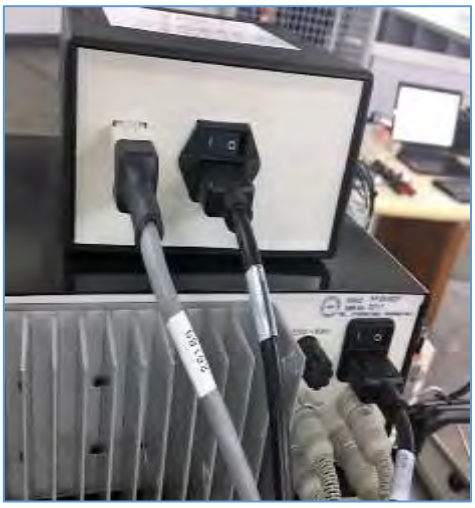

10. Air Supply

Connect air supply. Requires one 3/8" air supply.
Set to 80 psi (6Bar)
Air consumption is 10 CSM

11. Power Connection

Wire the power cord to 208-230vac, single phase. 5 Amp.

NOTE: It is important that the green wire should be connected to earth ground.

1.7. Power "ON"

Twist the Red Emergency Stop button "**A**" to return to its normal position. Turn the machine "ON" by pressing the green button **"B".** The machine will power on, and the amber light and the 2 upper counters will turn on "**C**".

B

C

A

1. Electric Eyes

With power on, examine all 5 electric eyes and ensure they are all adjusted and functioning properly. When the eye is seeing the reflective tape, the red LED under the plastic cover at the rear should be on. See service section for instructions if required

2. Main Control Box

With the unit power “ON”, set the left switch of the control box to “MANUAL” position, PRESS CLAMP/FOLD, CLAMP/TRANSFER, AIR JETS AND STACKS buttons and see if the components are performing correctly.

Change Position of the switch to “AUTO”, press CYCLE STOP, CONVEYORS JOG, FEED BAND AND CUT BAND buttons and see if the components are performing correctly.

3. Sewing Pedal

Rotate the sewing head hand wheel by hand and check for freedom of movement. Hand wheel rotation should already be set. Test sewing with SEW pedal (left pedal) on a piece of scrap material. Press CUTBAND on the main control board to cut thread chain if required

4. Footlift Pedal

Step on FOOTLIFT Pedal (right pedal) to verify proper function of Footlift.

1.8. Interim Storage

If the machine has to be stored temporarily, it must be oiled or greased and stored in a dry place where it is protected from the weather in order to avoid damage. A corrosion-inhibiting coating should be applied if the machine has to be stored for a longer period of time and additional precautions taken to avoid corrosion.

2. OPERATION

Note: It is important that the machine operator read this manual and is familiar with all the functions and safety concerns of the unit before operating.

2.1. Individual Components

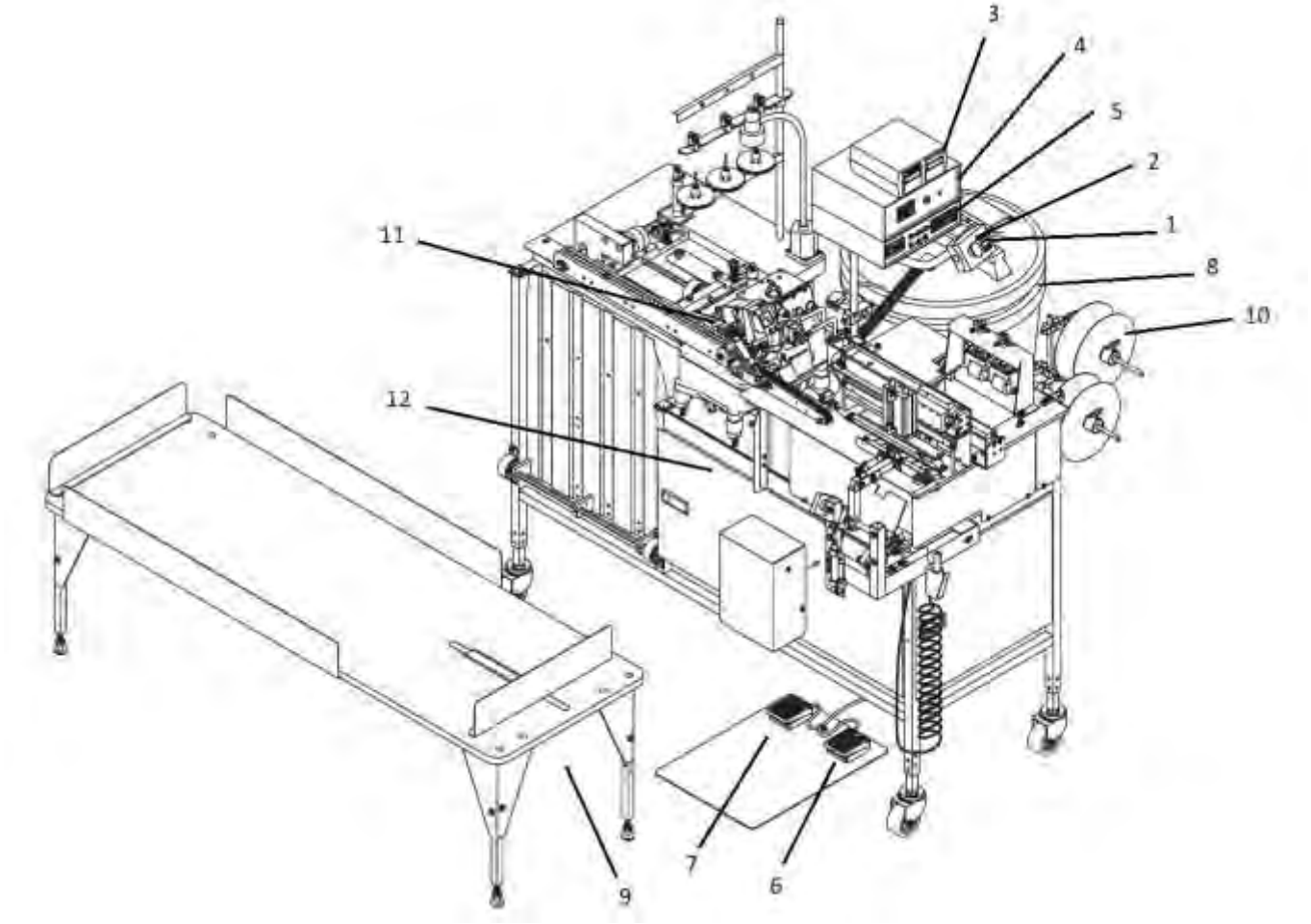

1.- Emergency Stop	7.- Sew Pedal
2.- On button	8.- Waste System
3.- Stacker	9.- Stacker
4.- Stepping Motor Drive Box	10.- Roll Holders
5.- Main Control Box	11.- Sewing Head
6.- Footlift Pedal	12.- Sewing Motor

1. Emergency Stop

Pressing this RED button will turn OFF power to the machine. This button will lock when pressed. Twisting the button will cause it to unlock and return to its normal position.

Caution: Unlocking the red button and pressing the green button will turn ON power to the machine.

2. "ON" Button

Turn the machine "ON" by pressing the GREEN button on the box just above the Emergency Stop button.

3. Stacker Counter Box (Top)

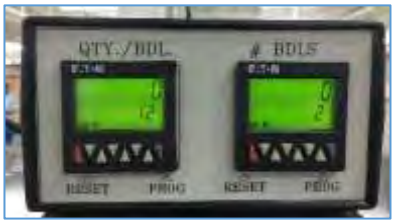

This box contains the counters for the piece count per bundle and the number of bundles completed. To set the counter, press one of the 6 white buttons on the counter face. Numbers will appear above each of the buttons. To change the number, press the button under the position to be changed. The number will increase with each press of the button.

4. Stepping Motor Drive Box (Middle)

This box controls the speed of the conveyor for sewing and jogging to stack. It also runs the band feed stepping motor. The thumbwheels should be set to match the sewing speed of the seamer. If the seamer stitch length is changed, the conveyor speed must be adjusted also. Different fabrics will vary slightly in the speed they feed through the seamer. The operator may need to make small changes in the conveyor speed to keep the seamer sewing the end of the band square. Presser foot pressure effects the feed speed also. Adjust pressure foot pressure to the medium, light range.

5. Main Control Box (Bottom)

This box controls all other functions of the unit. It has a resettable piece counter. The "AUTO/MANUAL/RESET" toggle switch controls the operation mode of the machine. All of the functions printed above the pushbuttons are active when the switch is in the "AUTO" position. If the switch is in 'MANUAL position, all of the functions printed below the pushbuttons are active. Another toggle switch selects "1 ROLL" or "2 ROLL" mode. The thumbwheels adjust the band length, end alignment trailing edge chain cut length, and stacker door timing

6. Footlift Pedal

This pedal will raise the presser foot.

7. Sew Pedal

Activating this pedal will run the sewing machine and disable the automatic functions.

8. Waste System

The system only runs while sewing to reduce air consumption. Has filtered waste container to trap lint. It needs to be cleaned every day. See maintenance section on this manual.

9. Stacker

The stacker operates after each band is sewn and moved to the stack position. Each stack cycle increments the piece per bundle counter. When the desired quantity for the bundle is reached, the index table will move the stack out of the way, increment the bundles counter, and reset the pieces per bundle counter to 0.

10. Roll Holders

For Collars operations use configuration B, for Waistbands operations use configuration C

B

C

11. Sewing Head

Units can be supply with different Sewing heads. Refer to the sewing head manufacturer for detailed instructions.

12. Sewing Motor Control Boxes

Units can be supply with 2 different motor types.

1. Efka

The control box is located inside the right door under the machine. It has an On/Off switch which should remain in the “ON” position at all times. The sewing head is controlled by this box.

2. Panasonic

It is located inside the right door under the sewing machine (A)., The sewing head is controlled by this box.

2.2. Pre-Sewing

2.2.1. Cover removing.

1. Release nut **"A"** and Remove feeding belt from the sewing Area.

2. Release Nut **"C"** & **"D"** and remove plate

3. Open Sewing machine plates "**E**" & **"F"**

2.2.2. Thread Break Detectors.

Tread the Need thread break detector and show on the picture below.

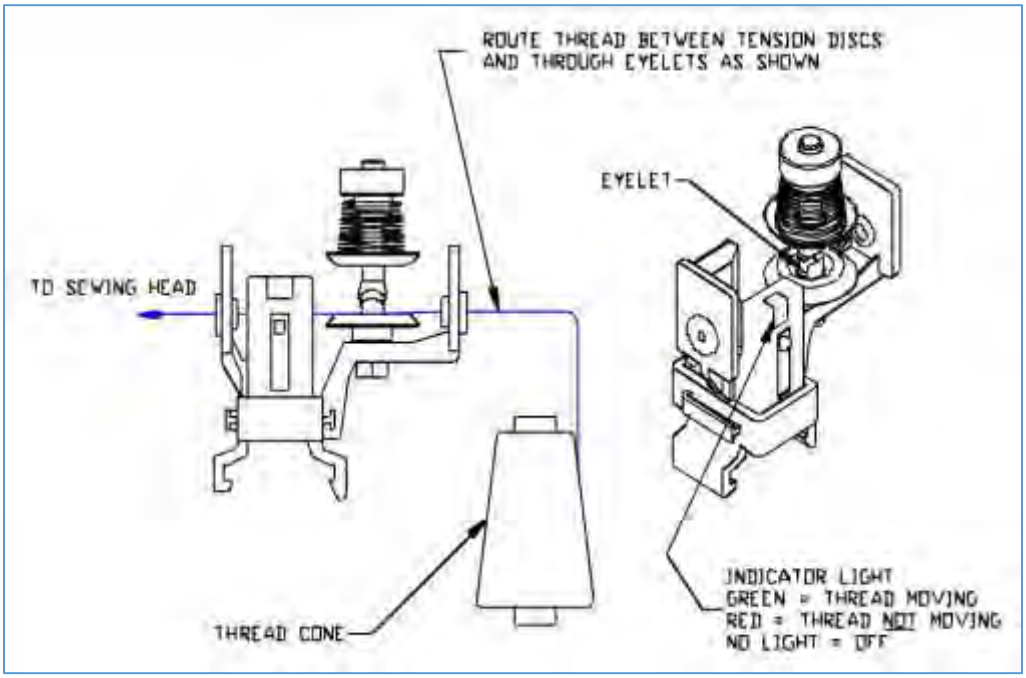

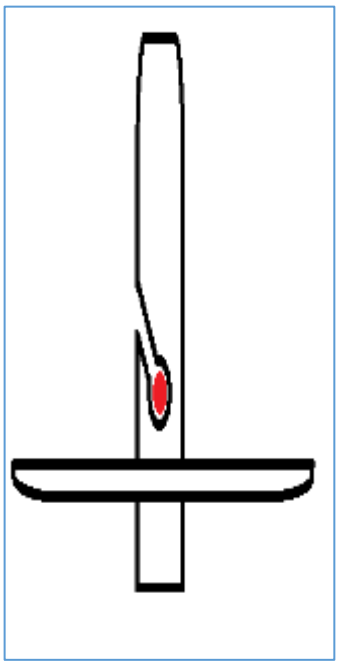

2.2.3. Threading the Sewing Head.

Refer to the sewing machine manufacturer for the correct threading

Pegasus EX5200 Series

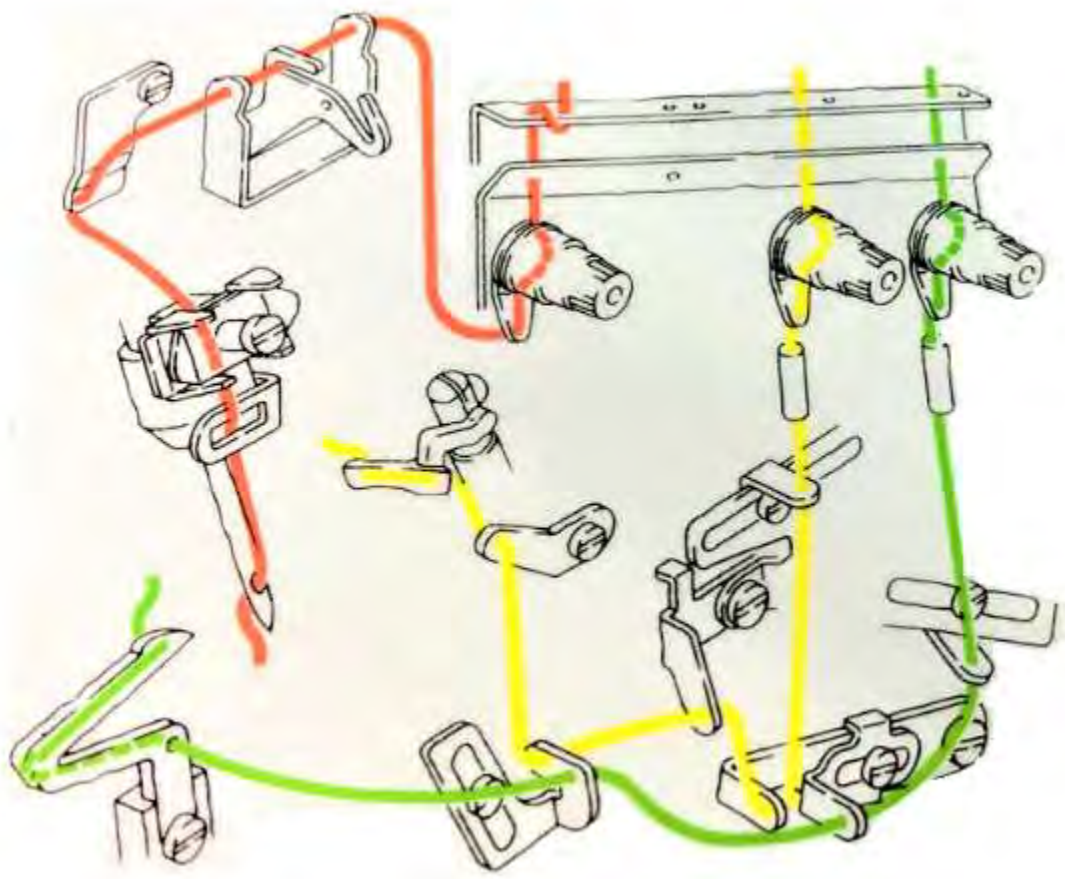

2.2.4. Pre-Sewing Test.

1. Press Footlift pedal to raise the foot.

2. Add a piece of material under the presser foot and release pedal

3. Press Sewing pedal and sew a piece of material.

4. Keep sewing and testing the seam

5. Run chain out of the material.

6. Press CUT BAND (Automatic Mode) button on the main control box to cut the thread chain. Reposition all covers.

2.2.5. Load Rolled or Festooned Rib Knit

Load the rolls of fabric on the roll holder and align the roll with the guides.

For single rolls use the right roll holder and the right take-up roller

Set the "AUTO / MANUAL / RESET" toggle switch to "AUTO".

Lay the end of the fabric over the slack feed roller. Place your hand on the roller and rotate the roller to feed the fabric between the rollers, or press "FEED BAND" on the control box. Use the three collars **"A"** to guide the material and center it with the feeding rollers

Feed about 24" of fabric through the take-up rollers.

Feed the bands through the guides and up to the feed roller. Use the 3 Screws **"B"** to move the guides **"C"** to adjust the guides to a close fit to the band width.

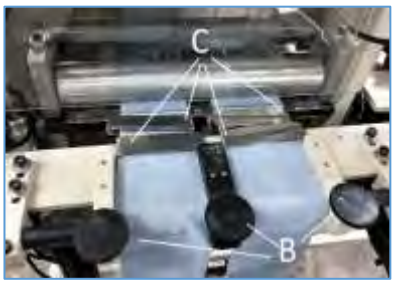

Press “FEED BAND" on the control box until the band extends beyond the band cutter. Press "FEED BAND" to feed several inches of fabric and allow the guides to align the edges of the band.

Cut the band by pressing "CUT BAND" on the control box.

Dispose of the cut ends.

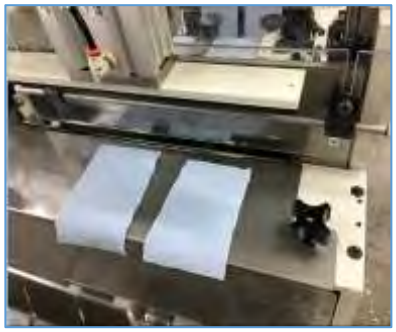

Set the "1 ROLL / 2 ROLL" switch as needed on the main control box. Change the Auto Switch from “AUTO” to “MANUAL” and back to “AUTO” to reset the unit.

2.2.6. Programming the Desired Length

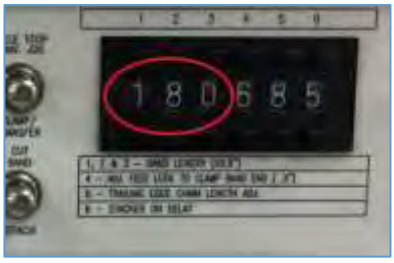

Thumbwheel Switches 1, 2, 3 of the Main Control Box control the cut band length.
TW#I Indicates band cut length in I0” increments. (3-30”)
TW#2. Indicates band cut length in I” increments. (4 = 4”)
TW#3. Indicates band cut length in 1/10" Increments. (5-5/10
Setting for 34.5" band length = 345. The actual band length will vary depending on the fabric. Adjust as needed to get precise band length.

2.2.7. Programming the number of pieces

Quantity per bundle (QTY./ BDL) sets the number of pieces that will be stacked in each bundle. The indexer activates when this count has counted up to the desired quantity and the counter resets itself back to the preset number.
To change the quantity on the counter, press one of the white arrow buttons. Numbers will appear over each of the buttons. Press the button until the number needed appears in the display. Press the 'RESET button to bring up the new count on the display. The counters count up to the set quantity.

2.2.8. Programming the number of bundles

Bundles (#BDLS) sets the number of bundles to be stacked before the machine stops. The machine stops when this counter counts up the set quantity. This counter must be reset before the machine will run again

To change the quantity on the counter press and hold the arrows buttons, while pressing the buttons under each digit in the display until the desired count is displayed. Press the 'RESET button to bring up the new count on the display. The counters count down to zero.

2.2.9. Start the Machine

Change the Auto Switch from AUTO to MANUAL and back to AUTO to reset the unit. Press "START" on the main control box. The machine will start the automatic cycle. One operator can run up to 7 machines.

2.3. Sewing

After the operator loads rolled or festooned rib knit, programs the desired length, and starts the machine, the material is metered, cut, sewn, and stacked automatically. The stacker automatically indexes after the programmed number of pieces per bundle is sewn. The system automatically stops after the programmed number of bundles are completed or material supply is depleted.

Inspect the first band as it is transferred after being cut, but before it is sewn. If the ends do not align properly adjust the flow control (1, 2) at the right of the fold and cut assembly according to the instructions printed there. It may also be necessary to adjust thumbwheel **#4** to get the ends to align properly.

Inspect the band after it has been sewn. If the end of the band is not sewn straight across, adjust the conveyor speed on the "Conveyor Speed" box by changing the thumbwheels.

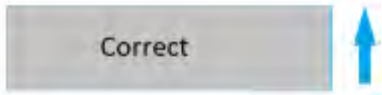

If the seam slopes to the rear of the band (A), decrease the speed the conveyor.

If the seam slopes to the front of the band (B), increase the speed of the conveyor.

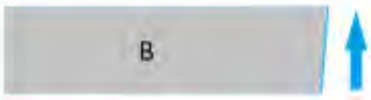

Adjust the band stop so that the band makes contact with the stop at the end of the transfer stroke. This helps keep the band straight in the conveyor.

Measure the band length and adjust the first three thumbwheels (9 as needed to get the correct length. Changing thumbwheel #3 one digit should change of the band about 1/10".

2.4. Reference Table

Thumbwheel Switches 1, 2, 3 of the Main Control Box control the cut band length. (Dimensions change by machine and materials)

COUNTER	Inch	Cm	COUNTER	Inch	Cm	COUNTER	Inch	Cm	COUNTER	Inch	Cm
100	3.71	9.43	350	17.84	45.31	600	31.96	81.19	850	46.09	117.07
105	3.99	10.15	355	18.12	46.03	605	32.25	81.91	855	46.37	117.79
110	4.28	10.86	360	18.40	46.74	610	32.53	82.63	860	46.66	118.51
115	4.56	11.58	365	18.69	47.46	615	32.81	83.34	865	46.94	119.22
120	4.84	12.30	370	18.97	48.18	620	33.09	84.06	870	47.22	119.94
125	5.12	13.02	375	19.25	48.90	625	33.38	84.78	875	47.50	120.66
130	5.41	13.73	380	19.53	49.61	630	33.66	85.50	880	47.79	121.38
135	5.69	14.45	385	19.82	50.33	635	33.94	86.21	885	48.07	122.09
140	5.97	15.17	390	20.10	51.05	640	34.22	86.93	890	48.35	122.81
145	6.25	15.89	395	20.38	51.77	645	34.51	87.65	895	48.63	123.53
150	6.54	16.60	400	20.66	52.49	650	34.79	88.37	900	48.92	124.25
155	6.82	17.32	405	20.95	53.20	655	35.07	89.08	905	49.20	124.97
160	7.10	18.04	410	21.23	53.92	660	35.35	89.80	910	49.48	125.68
165	7.38	18.76	415	21.51	54.64	665	35.64	90.52	915	49.76	126.40
170	7.67	19.47	420	21.79	55.36	670	35.92	91.24	920	50.05	127.12
175	7.95	20.19	425	22.08	56.07	675	36.20	91.95	925	50.33	127.84
180	8.23	20.91	430	22.36	56.79	680	36.49	92.67	930	50.61	128.55
185	8.51	21.63	435	22.64	57.51	685	36.77	93.39	935	50.89	129.27
190	8.80	22.35	440	22.92	58.23	690	37.05	94.11	940	51.18	129.99
195	9.08	23.06	445	23.21	58.94	695	37.33	94.82	945	51.46	130.71
200	9.36	23.78	450	23.49	59.66	700	37.62	95.54	950	51.74	131.42
205	9.64	24.50	455	23.77	60.38	705	37.90	96.26	955	52.02	132.14
210	9.93	25.22	460	24.05	61.10	710	38.18	96.98	960	52.31	132.86
215	10.21	25.93	465	24.34	61.81	715	38.46	97.70	965	52.59	133.58
220	10.49	26.65	470	24.62	62.53	720	38.75	98.41	970	52.87	134.29
225	10.77	27.37	475	24.90	63.25	725	39.03	99.13	975	53.15	135.01
230	11.06	28.09	480	25.18	63.97	730	39.31	99.85	980	53.44	135.73
235	11.34	28.80	485	25.47	64.68	735	39.59	100.57	985	53.72	136.45
240	11.62	29.52	490	25.75	65.40	740	39.88	101.28	990	54.00	137.16
245	11.91	30.24	495	26.03	66.12	745	40.16	102.00	995	54.28	137.88
250	12.19	30.96	500	26.31	66.84	750	40.44	102.72	1000	54.57	138.60
255	12.47	31.67	505	26.60	67.56	755	40.72	103.44	1005	54.85	139.32
260	12.75	32.39	510	26.88	68.27	760	41.01	104.15	1010	55.13	140.04
265	13.04	33.11	515	27.16	68.99	765	41.29	104.87	1015	55.41	140.75
270	13.32	33.83	520	27.44	69.71	770	41.57	105.59	1020	55.70	141.47
275	13.60	34.54	525	27.73	70.43	775	41.85	106.31	1025	55.98	142.19
280	13.88	35.26	530	28.01	71.14	780	42.14	107.02	1030	56.26	142.91
285	14.17	35.98	535	28.29	71.86	785	42.42	107.74	1035	56.54	143.62
290	14.45	36.70	540	28.57	72.58	790	42.70	108.46	1040	56.83	144.34
295	14.73	37.42	545	28.86	73.30	795	42.98	109.18	1045	57.11	145.06
300	15.01	38.13	550	29.14	74.01	800	43.27	109.90	1050	57.39	145.78
305	15.30	38.85	555	29.42	74.73	805	43.55	110.61	1055	57.67	146.49
310	15.58	39.57	560	29.70	75.45	810	43.83	111.33	1060	57.96	147.21
315	15.86	40.29	565	29.99	76.17	815	44.11	112.05	1065	58.24	147.93
320	16.14	41.00	570	30.27	76.88	820	44.40	112.77	1070	58.52	148.65
325	16.43	41.72	575	30.55	77.60	825	44.68	113.48	1075	58.80	149.36
330	16.71	42.44	580	30.83	78.32	830	44.96	114.20	1080	59.09	150.08
335	16.99	43.16	585	31.12	79.04	835	45.24	114.92	1085	59.37	150.80
340	17.27	43.87	590	31.40	79.75	840	45.53	115.64	1090	59.65	151.52
345	17.56	44.59	595	31.68	80.47	845	45.81	116.35	1095	59.93	152.23

2.5. Maintenance

It is important that the machine operator read this manual and is familiar with all the functions and safety concerns of the unit before operating.

2.5.1. General Safety Instructions

Maintenance should only be performed by trained, qualified personnel. Before performing any maintenance or repair work, switch off the electrical, pneumatic, etc. power to the machine at the main source and secure it with a padlock so that it cannot be switched on again without authorization. Refer to lockout/tag out procedures

- Always wear proper safety equipment when operating or performing maintenance on any equipment.
- All recommended maintenance is for a single shift schedule; adjust as necessary for a multi-shift operation.
- Equipment should not be used for purposes other than designed or specified.
- The machine shall be switched off, come to a standstill and be secured so that it cannot be switched on again inadvertently before starting any maintenance work whatsoever.
- Use proper lockout/tag out procedures to secure the machine against inadvertent startup.
- Remove any oil, grease, dirt and waste from the machine, particularly from the connections and screws, when starting the maintenance and/or repair work.
- Do not use any corrosive-cleaning agents.
- Use lint-free rags.
- Retighten all screw connections that have to be loosened for the maintenance and repair work.
- Any safety mechanisms that have to be dismantled for setting-up, maintenance or repair purposes must be refitted and checked immediately after completing the work

2.5.2. Preparation

Swing out feed belt and open all machine covers

- Release nut “A” and Remove feeding belt from the sewing Area.
- Release Nut “C” & “D” and remove plate
- Open Sewing machine plates “E” & “F”

Preventive Maintenance 8 Hrs

		Required Materials
Model:	1996	Oil can
Serial #:		Oil for sewing machine
Operation:	Auto Cuff, Collar, and Waistband	Clean cloth
Sew Head:	Pegasus EX5200	Compressed air
Serial #:		
Needle:	B-27	

Before starting the day's shift with "The Machine Off"	
Wipe the lenses of all electric eyes and reflective tapes with a clean cloth.	  
Check for liquid waste in the air filter and drain if necessary.	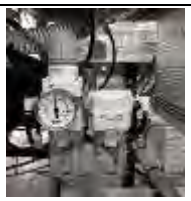
Check the oil level in the lubrication tank and add if required. Keep level between lines H and L of oil gauge.	 
After a day's shift with "The Machine Off"	
Check for thread accumulation on rollers, pulleys and the moving parts.	 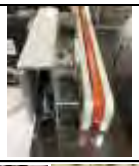
Open covers, blow out and wipe the machine with a clean cloth, and remove any dirt or tangled threads. Clean sewing motor ventilation.	  
Clean filter on waist container. Dump as necessary.	
Cover the machine and notify the supervisor of any unusual noises or abnormalities that were present during the working shift.	

3. SERVICE

NOTE: Maintenance should only be performed by trained, qualified personnel..

3.1. Lockout/Tagout Program

"Lockout/Tagout (LOTO)" refers to specific practices and procedures to safeguard employees from the unexpected energization or startup of machinery and equipment, or the release of hazardous energy during service or maintenance activities. This requires that a designated individual turns off and disconnects the machinery or equipment from its energy source(s) before performing service or maintenance and that the authorized employee(s) either lock or tag the energy-isolating device(s) to prevent the release of hazardous energy and take steps to verify that the energy has been isolated effectively. The following references provide information about the LOTO process.

Equipment Energy Control Procedure Lockout/Tagout Program				
Description:	**Band / Collar Maker**		Model:	**1966B**
Manufacturer:	**Atlanta Attachment Co.**		Location:	
Energy		Location	Magnitude	Control Method
Electrical:	X	Disconnect/Ctrl Box	**220V**	Lockout & Tag
Pneumatic:	X	Main Regulator	**80 PSI**	Lockout & Tag
Gravity:	X	Belts		
Remember to Release All Stored Energy!				
Shutdown Procedure:				
Inform all affected personnel that the machine will be in Lockout status. Turn the power and pneumatic disconnects to the OFF position. Fill out the tag with necessary information of the Lockout. Install the Lockout device. Verify all stored electrical energy has been released by pressing the power on button. Also, use meter to test circuits in the electrical panel to insure stored energy is released there as well. Perform necessary maintenance, services and/or repairs.				
Startup Procedure:				
Inform all affected personnel that the Lockout of this machine is being removed. Replace any guards or safety devices which may have been removed during maintenance. Remove the Lockout device and tag. Turn the power and pneumatic disconnects to the ON position. Push the green button on the back of the control panel to turn the machine on. Inform all affected personnel that the Lockout has been removed and that the machine is ready for normal production operation.				

Approved By: _____ Date: _____

3.2. Mechanical

NOTE: All maintenance should be performed by a qualified service technician.

3.2.1. General Alignment.

Trimmed off material on the sewing head should be approximately ¼ inches wide. Readjust Sewing head Assembly (4 Screws A) or the Guillotine assembly (3 Screws B) to reach the desire amount.

Right amount of Cut

Too much Material

Adjustment Screws

3.2.2. Conveyor

Alignment

The conveyor needs to be aligned with the machine frame.
Adjustment is made by loosening both screws **"B"** and repositioning the whole assembly.
Make sure that locking screw "A" is tight holding the assembly on the maximal inside position. Assembly should be as close as possible to the sewing head without touching it or interfering with the electric eyes operation.

High

Release all the tension on the springs (Screws **"C"**) and let the whole assembly rest on the table.
Lower the front conveyor and align it with the back conveyor loosening the nut D and rotating the cylinder shaft.
With the front conveyor lowered, align the whole assembly with the table. Make sure the belts make contact with the plates along the entire length of the conveyor. If necessary, level the sewing head to the front and rear plates.

Pressure.

Release all the tension on the springs (Screws **"C"**) and let the whole assembly rest on the table
Tighten both tensioning screws until making contact with the springs and do a couple of extra turns to keep a minimal pressure on the belt assembly.

Place a piece of material under the conveyor and manually run the conveyor to check that the material is transported all way from the front to the back of the machine.

3.2.3. Guillotine

For proper operation, the material must cut cleanly. For pressure adjustment, adjust the pressure screw **"H"** The correct pressure is the minimum necessary to get a clean consistent cut. If there are individual uncut strands, check the blades for knicks on the cutting edge.

3.2.4. Band Fold Clamp

In the home position, the fold clamp should be as close as possible to the guillotine with out to touching, parallel and leveled to the table.

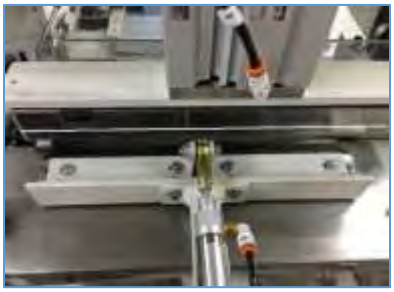

Parallel

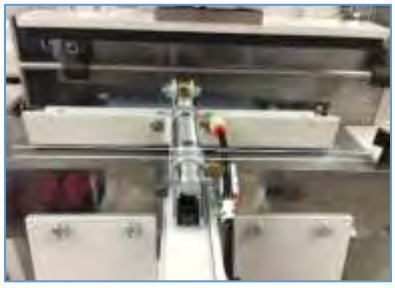

Aligned in high

Distance from Knife

Adjust with screws **"A" , "B"**, **"C"** and **"D"** if required.

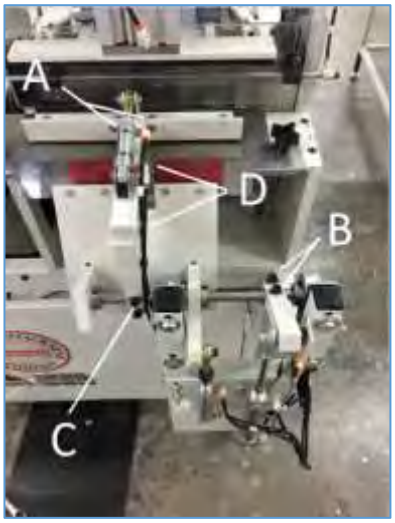

3.2.5. Band Clamp

In the clamping position, the band clamp should touch the cover plate and hold the material in position after the fold clamp releases it. Adjust pressure by moving the cylinder shaft.

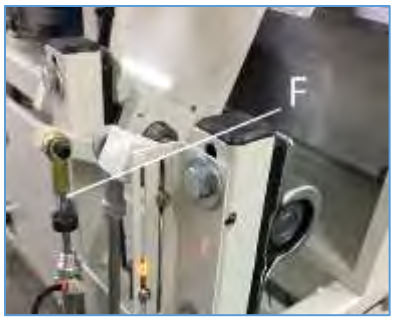

3.2.6. Transfer Clamp

The transfer clamp transfers the material from the guillotine to the front belt without changing the cut materials' position. In the extended position, the clamp has to hold the material but not fully compress the rubber. Adjust the cylinder height using the screws "G" if required.

3.2.7. Stacker

Stacker speed is defined by 2 flow control connected direct to the air cylinder. Activation time is control by Thumbwheel # 6 (STACKER ON DELAY) on main control box. The movement must be fast enough to remove the part from the conveyor (Use air flow control), but the arm should not reach the maximal expanded position "A" (use Thumbwheel #6)

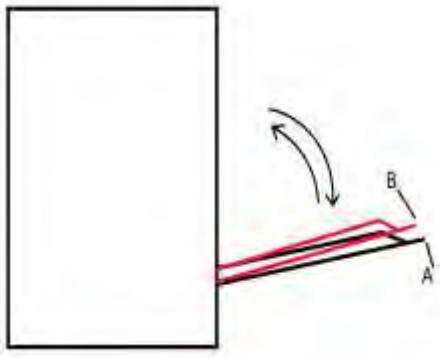

3.2.8. Chain Cutter

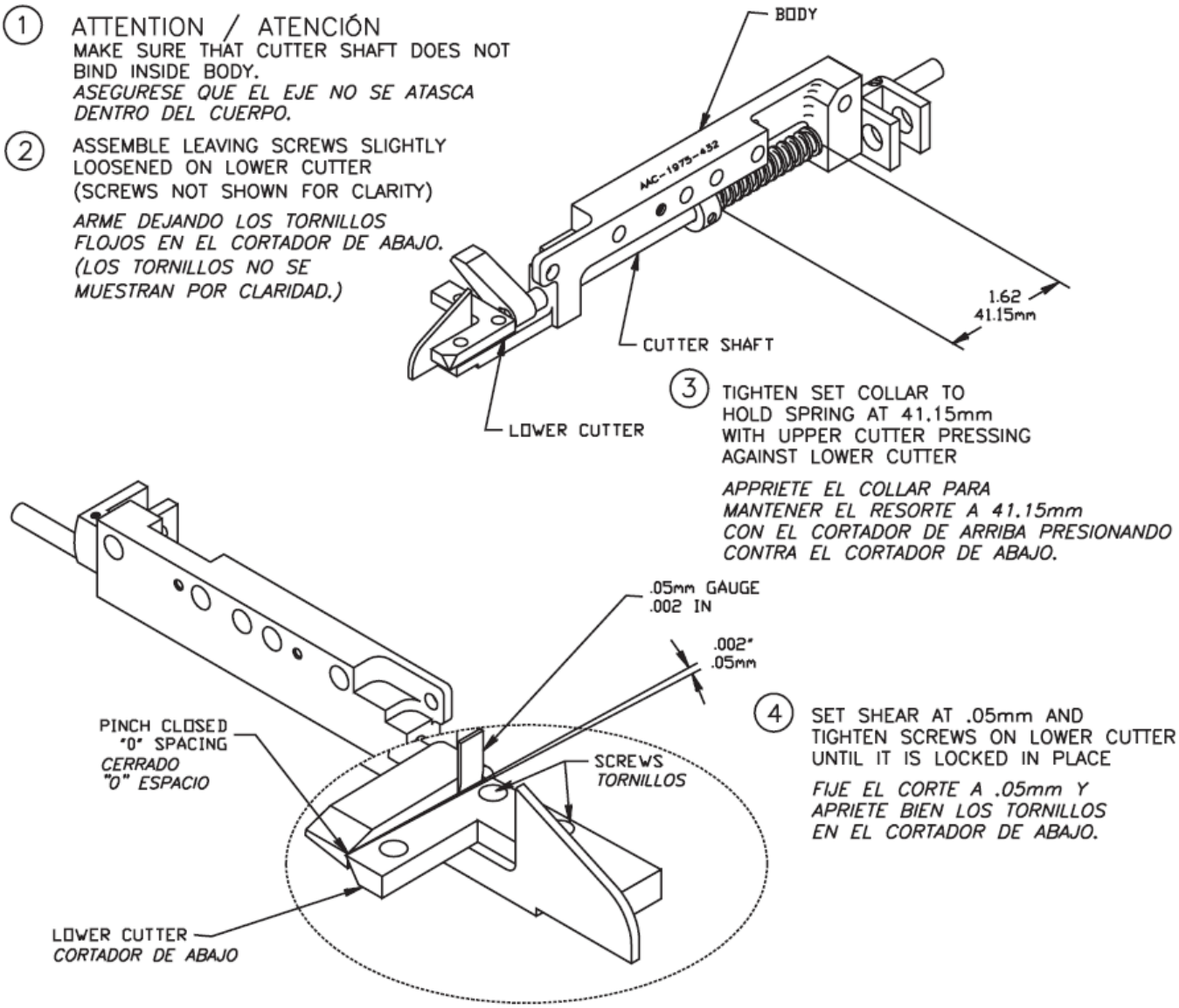

CUTTER ADJUSTMENT INSTRUCTIONS

3.3. Pneumatic

NOTE: All maintenance should be performed by a qualified service technician.

3.3.1. Air Maintenance Unit FR

The FR (Filter Regulator).unit assembly is located behind the table. It has 2 components, the Pressure Regulator and the Air Filter. This unit does not require an air lubricator.

1. Pressure Regulator

The purpose of the regulator is to keep the operating pressure of the system (secondary pressure) virtually constant regardless of fluctuations in the line pressure (primary pressure) and the air consumption. The presser regulator is set to 80 psi.

2. Air Filters

Clean air from your compressed air system is essential for the safe and efficient operation of this equipment. This unit has 2 compressed air filters. They remove contamination from compressed air after compression has taken place.
Harmful contaminants like oil, dust, dirt, rust, and water-alone or in combination-can attack your system and clog sensitive pneumatic parts.
Condensate is drained manually by pushing the red bottom on the drain plug. They require a regular maintenance schedule (i.e., once per shift).

3.3.2. Venturi Chain & Trim Waste

The purpose of the waste venturi is to pull the thread and, material trimmings away as they're cut off. The air flow should be enough to get the material from the head to the waste can.

- If it is set too high, it will pull the edge of the garment into the knife and cut a hole in it.
- The operator needs to make sure that the trimmings aren't very long because that can also pull the garment into the knife.

3.3.3. Flow control panel

The panel is located inside the end door under the guillotine assembly.
Each number on the left match the number of the airline connection at the cylinders.

3.3.4. Solenoid Valve Stack Manifold

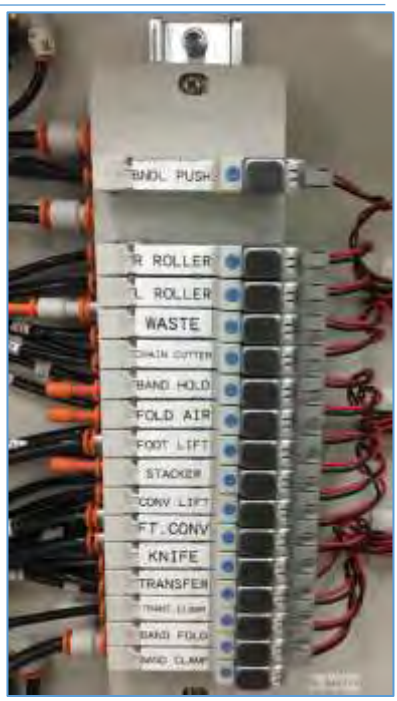

It is located inside the control box
The control system voltage is 24 VDC.
Each valve can be activated manually by pushing the blue button.
The red light means the valve is energized.

3.3.5. Air Pressure Switch.

There are two located inside the control box.

SW#1 Piece Counter

The first pressure switch is the signal to the piece counter. Every time the Rear Conveyor Lift Cylinder is activated it's sends a signal from the switch to the counter. For more details of connections see plumbing diagram located at the ends of the Spare Parts Book. Part # AAVF51FM1B

SW#2 Bundle Counter

The second pressure switch is the signal to the Bundle counter. Every time the Bundle Indexer Cylinder is activated it's sends a signal from the switch to the bundle counter.

3.3.6. Air Cylinders

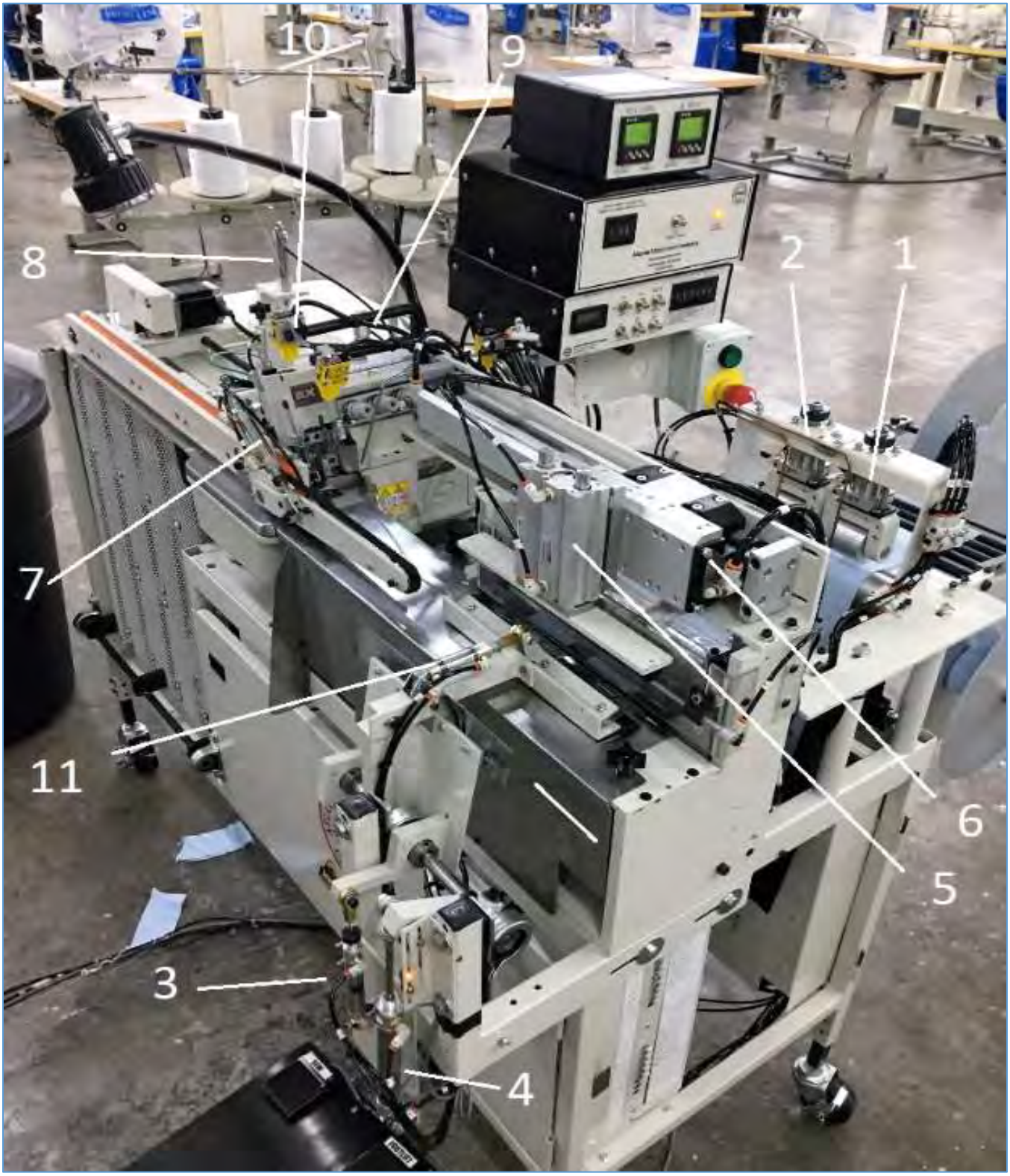

1.- Left Roller Lift	5.- Transfer Clamp (5/6)	9.- Foot Lift (17)
2.- Right Roller Lift	6.- Transfer Cylinder (7/8)	10.- Chain Cutter (23/24)
3.- Band Hold (21/22)	7.- Front Conveyor (11/12)	11.- Band Clamp (1/2)
4.- Band Fold (3/4)	8.- Rear Conveyor Lift (13)	

3.3.7. Blowers

1. **Puller Blowers Tubes**

   Help to form the loop of the feeding material.

2. **Air Jet at Folder**

   Help to load the material into the clamp. It is located under the feed roller material guide plate in front of the guillotine.

3. **Uncurled feed air**

   Outer uncurl jets make the edge of the material lay out. Helps to feed the material when it is pulled by the feed clamp.

4. **Front Conveyor Air**

   Helps to uncurl the top ply of the material before sewing.

5. **Air in front of the foot**

   Helps to guide the edge cut material into the waist system.

3.4. Electrical

NOTE: All maintenance should be performed by a qualified service technician.

3.4.1. Ground

This unit needs to be connected to ground (earth) for several reasons. In mains powered equipment, exposed metal parts are connected to ground to prevent user contact with dangerous voltage when electrical insulation fails. In electrical power distribution systems, a protective ground conductor is an essential part of the safety Earthling system. Connection to ground also limits the build-up of static electricity

3.4.2. Main Power Contactor.

When you press the green button, it activates the contactor to turn on the power to the machine.
It also functions to protect the unit after a power failure. It will keep the machine without power until the green START button is pressed.

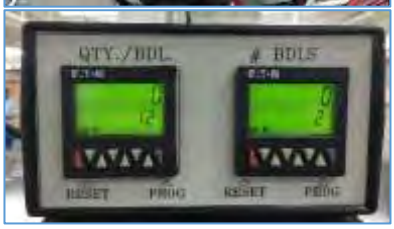

3.4.3. Stacker Counter Box (Top)

This box contains the counters for the piece count per bundle and the number of bundles needed and completed. To set the counter, press one of the 6 white buttons. Numbers will appear above each of the buttons. Press the button under the number to be changed and the number will increase. After the quantity needed has been set, press the red Reset button to return the display to the ready condition. The machine will not operate if the #Bundles counter is at "O"
Part Number: 1996-14

- **Programming Intructions**

E4148791 COUNTER PROGRAMING INSTRUCTIONS FOR 1996-14

STEP	PRESS	DISPLAY
1	RST & PRG HOLD 3 SEC.	Prog no
2	T2	Prog yes
3	Prog	dEFAuL
4	T2	Func
5	T2	InPut
6	Prog	InPPoL PnP
7	T2	InPPoL nPn
8	Prog	F ILtEr on
9	RST	EndPro no
10	T2	EndPro yes
11	Prog	SAUE

NOTE: PRESS RESET AND PROG KEY TOGETHER FOR 3 SEC TO ENTER PROG MODE.

USE T2 TO STEP THROUGH SETTINGS

USE BUTTONS UNDER EACH DIGIT TO ENTER VALUES

PRESS PROG KEY TO STORE VALUES AND INDEX TO NEXT SETTING

PRESS / T2 / PROG TO END PROGRAMMING.

USE PROG BUTTON TO SET DISP TO "PR2" FOR PRESET #2 (POWER UP DEFAULT)

THIS COUNTER USED "DEFAULT PROG #1 AS BASE LINE FOR PROGRAMMING AND PRESET 2 FOR COUNTS.

3.4.4. Stepping Motor Drive Box (Middle)

This box controls the speed of the conveyor for sewing and jogging to stack. It also drives the band feed stepping motor. The thumbwheels should be set to match the sewing speed of the seamer. If the seamer stitch length is changed, the conveyor speed must be adjusted also.
Different fabrics will vary slightly in the speed they feed through the seamer. The operator may need to make small changes in the conveyor speed to keep the seamer sewing the end of the band square Presser foot pressure effects the feed speed also. Adjust pressure foot pressure to the medium to light range. Part Number: AP-28-800P
The thumbwheel switches on the front of the control box set the speed of the conveyor stepping motor. During the loading cycle, the feed belt is driven by the jog signal. The speed is set using a potentiometer on the inside of the box.

1. JOG button

This button is disabled. Use "Conv. Jog" button on the main control box to operate the conveyor motor.

2. Thumbwheels

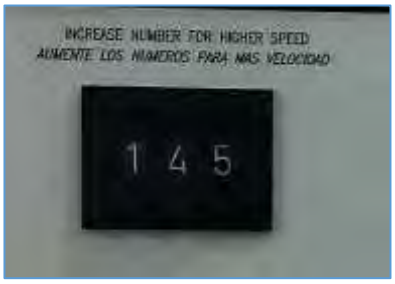

They are used to set the conveyor sewing speed to the speed of the sewing head. This number is determined by the seamer stitch length and the fabric feeding characteristics. This value may need to be adjusted depending on stitch length, fabric, feed dog height, and presser foot pressure.

- If you change the sewing stitch length, it will be necessary to adjust these numbers to re-synchronize the conveyor with the sewing head.
- Decreasing the number makes the belt go slower. For example, if you changed the stitch length from 10 SPI to 11 SPI, you would need to decrease the number in the thumbwheels by 10% to match the 10% shorter stitch length.

3. Potentiometer

Inside the box there is one small potentiometer. It sets the pre-feed JOG speed of the Belt feed

4. Jumpers

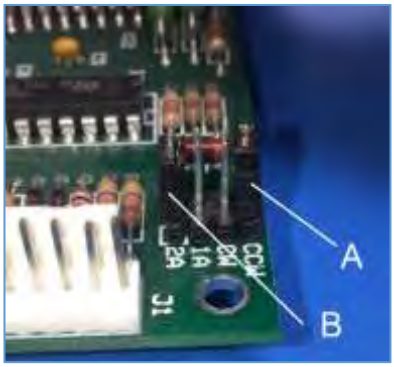

The direction of rotation of the feed roller and conveyor is controlled by the CW/CCW jumpers on the driver boards inside the box and should be set CCW. There are jumper clips for setting the motor currents on each driver board. The feed roller drivers are set to 2A.

- The top driver board powers the belt feed and
- The bottom driver board powers the band pre-feed.

5. Power

The back of the box has an On/Off switch, fuse, JOG cable, 3 stepping motor cable and Sync cables. Leave the On/Off switch ON all the time.

NOTE: When working on the box always disconnect the power cord before servicing.

3.4.5. Main Control Box (Bottom)

This box controls all other functions of the unit.
Part Number: 4060-06PA
It has a resettable piece counter. The "AUTO/MANUAL/RESET" toggle switch controls the operation mode of the machine. All of the functions printed above the pushbuttons are accessible when the switch is in the "AUTO" position. if the switch is in 'MANUAL position, all of the functions printed below the pushbuttons are accessible. Another toggle switch selects "1 ROLL" or "2 ROLL" mode

Thumbwheels

They are used to adjust the band length, end alignment, trailing edge chain cut length, and stacker door timing.

Thumbwheels 1, 2, 3

Thumbwheel Switches 1, 2, 3 of the Main Control Box
TW#I Indicates band cut length in I0" increments. (3 = 30")
TW#2. Indicates band cut length in I" increments. (4 = 4")
TW#3. Indicates band cut length in 1/10" increments (5 = 5/10")
Setting for 34.5" band length = 345. The actual band length will vary depending on the fabric. Adjust as needed to get precise band length.

Thumbwheel 4

It controls the length of band that is fed into the jaws of the band fold clamp in 1/10” increments. (6=6/10”).This setting controls the alignment of the cut band edges after it is folded.
Increasing this number will make the top ply longer.

Right Alignment

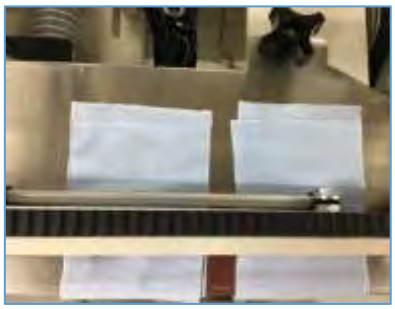

Number needs to be increased

Thumbwheel 5

It controls the length of the trailing edge chain on the second band.
The leading edge cut is controlled by the chain cutter eye. The leading edge length is adjusted by the position of the eye.

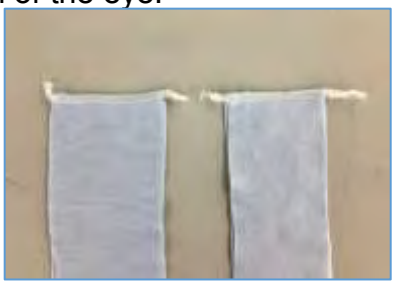

Righ Cut

Cut too long

Thumbwheel 6

This is the "ON" time setting for the stacker cylinder. This time is adjusted to match the stacker cylinder speed adjustment (flow controls) so that the air cylinder does not bottom out on the down stroke. The shortest period is 1. The longest period is 9.

Stacker Max stroke

Release time too early

Piece Counter

It counts the number of times the stacker is activated.
It can be used as a close estimate of the total pieces produced during a shift.

3.4.6. Operation Mode

AUTO Mode.

Set the AUTO/MANUAL/RESET toggle switch to “AUTO” for normal automatic operation the machine. It controls the function of the other push buttons on the front panel. The text above each push button indicates the operation that the switch performs in “AUTO” mode. The switch also resets the program and all machine functions whenever it is changed from “AUTO" to "MANUAL" or from “MANUAL" to AUTO”

START

It starts the automatic sewing cycle.

CYCLE STOP / CONV.JOG

It operates the side conveyor motor to test its operation (the "Jog" button on the stepper box is disabled). It will stop the automatic cycle after the piece in process is finished if the machine is running.

FEED BAND

It operates both sets of feed rollers to feed fabric. Be sure the loop feed roller is set to run faster than the band feed roller at the cutter.

CUT BAND

It operates both the band cutter to trim the fabric and the chain cutter to cut the chain.

MANUAL Mode.

When the Auto/Manual switch is in the "MANUAL' position, the function indicated below each push button can be tested. Automatic band making is disabled.

CLAMP/FOLD

It activates the band Clamp and Fold hardware for adjustment and testing.

CLAMP/TRANSFER

It operates the transfer clamp and transfer cylinder to test operation and adjust speeds.

AIR JETS.

It turns on the band fold air jets so they can be adjusted.

STACK

It cycles the stacker for adjustment of the flow controls and thumbwheel.

Other Front Panel Switch Functions:

I ROLL / 2 ROLL Switch

In "UP" position the machine will process a Single roll material from either roll position. In the "Down" position, the machine will run two rolls of fabric at the same time. When one roll runs out, switch to “1 Roll" and finish the remaining roll.

Piece Counter Reset

It resets the piece count to zero.

3.4.7. Electric Eyes

The unit has 5 electric eyes as follows.

Eye #1 Needle Positioning

The function of eye number one is to position the needle.
The setting of eye number one is to stop the needles as they move upward and the feed dog teeth are level with the throat plate.

Eye #2: Leading Edge

The function of eye number 2 is to control the length of the leading edge chain on each piece. The position of eye number 2 on the reflective tape controls the length of the chain.

Eye #3: Trailing Edge Cut

The function of eye number three is to read the trailing edge of the second piece to start the trailing edge chain cut count.
The length of the chain is controlled by thumbwheel number 5.

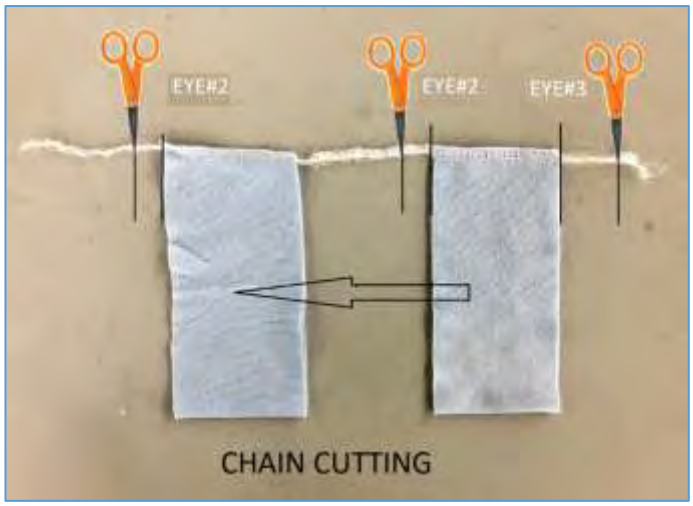

Eye #4: Lane 1 Roll Material

The function of eye number four is to control the feeding of material in lane 1.
The eye should be positioned so that the slack loop in lane 1 is the desired length.

Eye #5: Lane 2 Roll Material

The function of eye number five is to control the feeding of material in lane 2.
The eye should be positioned so that the slack loop in lane 2 is the desired length.

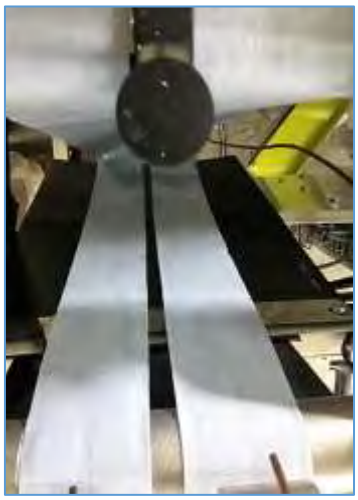

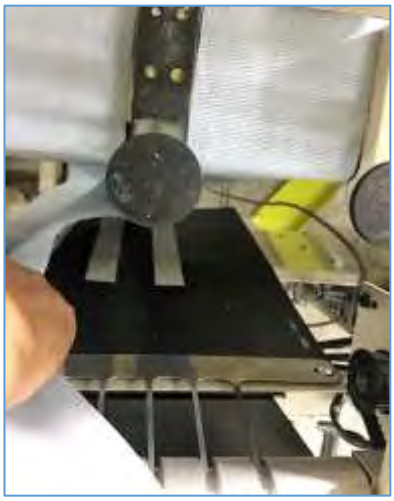

Eye Sensor Adjustment

Remove the clear plastic cover from the end of the sensor. There are two adjusting screws under the cover. One is labeled “GAIN” and is used to set the sensitivity of the sensor. The other screw is labeled “DO & LO” and should always be fully clockwise.
With the end of the sensor pointing at the center of the reflective tape, turn the “GAIN” screw counter-clockwise until the red LED indicator is off
Then turn the “GAIN” screw clockwise until the LED indicator comes on.
Then turn the “GAIN” screw one full turn clockwise. The LED indicator should be blinking slowly approximately 2 pulses per second. The eye on the hand wheel should be at least 1 1/2 full turns.
Cover the eye so that the sensor cannot see the reflective tape and the LED should go off.
Part #FFSM312VQ

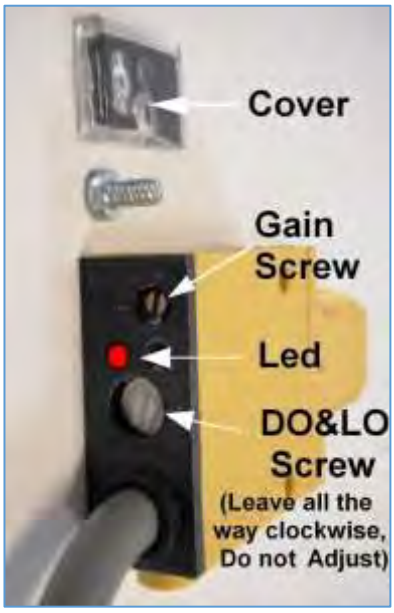

Reflective Tape Maintenance

Use a soft cloth for cleaning. Do not use chemicals or abrasives to clean it. Avoid any contact with oils and liquids. Do not touch the tape with bare fingers. If tape is dirty or opaque, the eye may not function correctly.

3.4.8. Thread Break Detectors.

1. Needle Thread Sensor

Part Number: (4003-3WT2). Position finger on top of indicator light to activate or deactivate

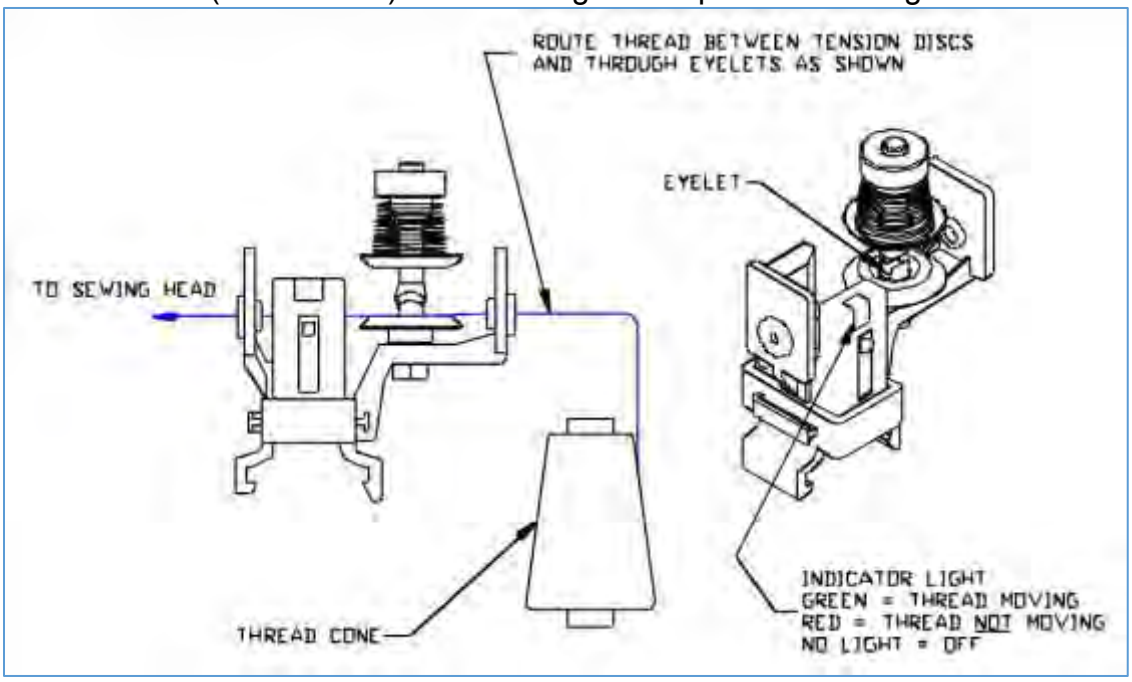

3.4.9. Motors

There are 4 motors in the machine. Conveyor Stepping Motor, Band Feed Stepping motor, Loop motor and Sewing Machine Motor.

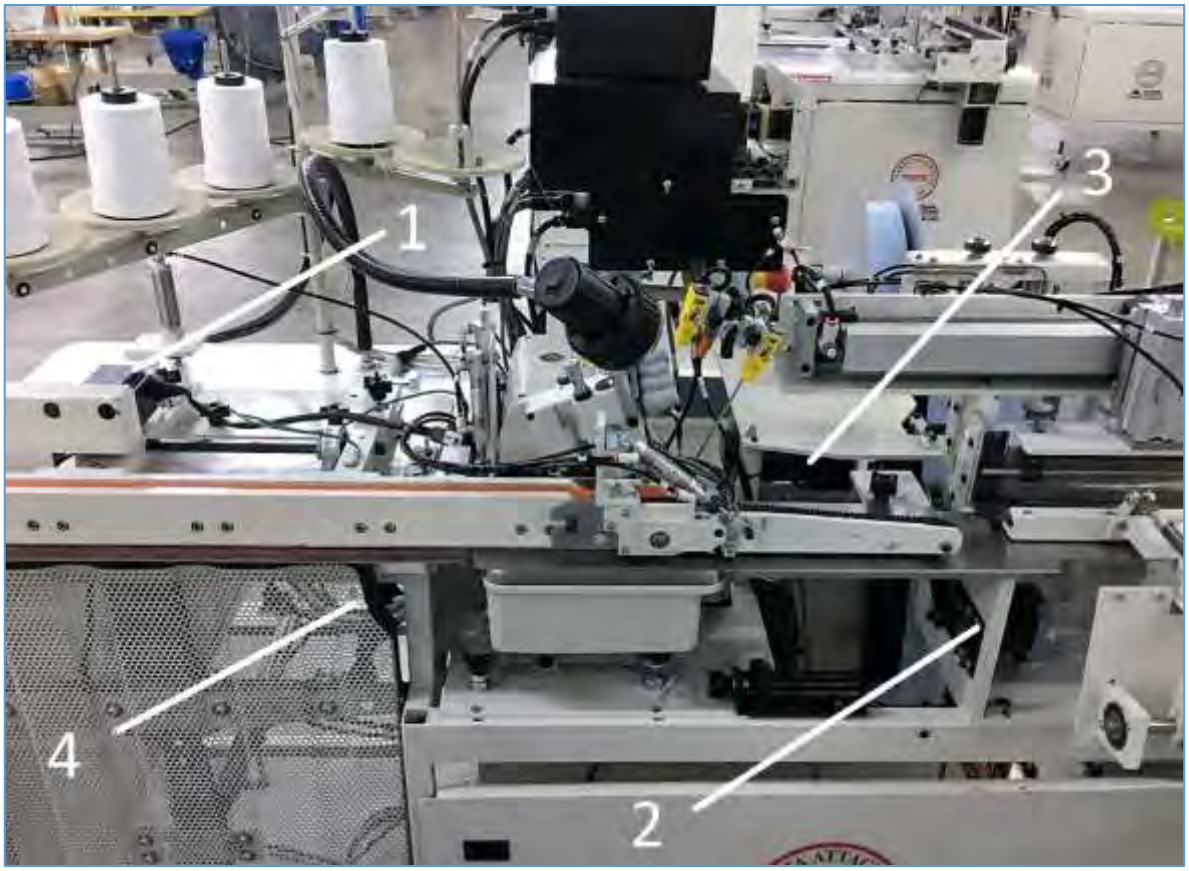

1. **Conveyor Stepping Motor. (1)**

It is controlled by the stepping motor drive box. The belt speed during sewing is controlled by the thumbwheel switches. The jog speed is controlled by an internal potentiometer. (See Stepping Motor Drive Box for more details).

2. **Band Feed Stepping Motor (2)**

It is powered by the stepping motor drive box. It runs at a preset speed that cannot be changed. The Main control box controls the steps that this motor will do according to the material length set on the first 3 thumbwheel switches.

3. **Loop Motor (3)**

The motor is activated by the eyes 3 and 4 (See electric eyes for more details). If either of these eyes is uncovered, the motor will start running. The left or right roller lift cylinders will be activated according to the eye that was uncovered, feeding the material until the eye is covered again. The speed of the motor is controlled on the Speed Control Unit on the electric cabinet. Increase or decrease the speed according to amount of material that needs to be fed.

4. Sewing Motor

It is located under the table. It is the one that runs the sewing head. The control box always needs to be with the switch in ON position.

A. Efka Sewing Motor

Programming the Code Number

NOTE: The parameter numbers in the illustrations below serve as examples and may not be available in all program versions. In this case, the display shows the next higher parameter number. See List of Parameters. If you have a screen with 4 digits your access code will be 3112 instead of 311

Parameter Settings EFKA DC1500

PARAMETER	RANGE	VALUE	DESCRIPTION
Do this first	*****	****	Perform a master reset before programming, see below
290		5	Mode of operation. MUST SET THIS PARAMETER FIRST!
026		0	Treadle mode
111	200-9900 rpm	4000	Maximum speed as requires
153	0-50	35	Braking power at standstill.
161	0-1	1	Motor rotation. 1=CCW
204	001-100	1000	Footlift (FL) holding power.
270	0-5	1	External handwheel sensor configuration.
272	0200-2550	800	Drive ratio between motor pulley and handwheel pulley. If handwheel pulley is smaller than motor pulley, increase this value to slow down sewing head until measured speed matches speed set with parameter 111.
436		0	Use code "5913". This disables an input that was causing box to reset itself.
401		0-1	change from 0-1 to save parameters
Front panel LED's:			**Programming Instructions:**
LED 1:	Off		1. Power on holding down the "P" button till "COD" is displayed.
LED 2:	Off		2. Press ">>" once and enter the number "5913"
LED 3:	Off		3. Press "E" once and "2.0.0." is displayed. This is a parameter.

LED 4:	Off		4. Press "E" again and the value for parameter 200 is displayed.
LED 5:	Off		5. With the value on the screen, adjust to desired setting.
LED 6:	Off		6. Press "E" to enter value and continue with parameter setting.
LED 7:	?, Stop at needle down.		7. Repeat for other parameters, press "P" once when complete.
LED 8:	?, Stop needle Up		**8. Run sewing head to save parameters before powering down**
			To Perform Master Reset of Parameters:
			1. Power on holding down the "P" button till "COD" is displayed.
			2. Press ">>" once and enter the number "5913"
			3. Press "E" twice and "093" is displayed.
			4. Press "+" once, "094" is displayed.
			5. Press "P" to exit programming mode with all default values.

B. Panasonic Motor Sewing Motor

Programming D9 Motor

1. Turn off power to machine.
2. Hold Up Arrow button, Turn on the power
3. Display shows Axxx
4. Use + & - buttons to scroll to desired parameter #.
5. Press > to toggle to parameter value.
6. Displays shows the parameter value xxxx.
7. Use + & - buttons to change parameter value.
8. Press enter (E) button to save change.
9. Press > to toggle to back to parameter number.
10. Use + & - buttons to scroll to next desired parameter #.
11. Repeat until all desired parameters are updated. Be sure to press enter (E) after changing the parameter values.
12. Turn off the power momentarily.
13. For 1996, set the following parameters:

    A 27 = 1 (Stop needle up)
    A 29 = 1 (Rotation, 1 CCW, 0 CW)
    A 70 = 5000 (max speed)
    A 91 = 1 (Pneumatic solenoid foot lift, 100% modulation)

1. Turn off power to machine.
2. Hold “E” & “-“ buttons, Turn on the power
3. Use + & - buttons to change parameter value to F166.
4. Press > to toggle to parameter value.
5. Use + & - buttons to change parameter value to 600 (one minute foot time-out).
6. Press enter (E) button to save change.
7. Turn off the power momentarily.

Programming D7 Motor

Apply to Small Programmer MPUR01A10

NOTE: to adjust parameters after initial programming, start with step number 10

1. Turn off power to machine.
2. Plug in the small Panasonic programmer.
3. Hold ENTER and MODE “+”, Turn on the power. Continue holding down buttons for 8 seconds, until 106 Y2 is displayed on screen.
4. Double-click the “ENTER” button to exit parameter mode.
5. Turn off the power.
6. Turn the speed control on the motor to the minimum.
7. Turn on the power.
8. Run the sewing head for a few seconds (at least 5) to set the pulley ratio in the Panasonic Motor. Pressing the sew pedal will cause the head to sew.
9. Turn off the power.
10. Turn on the power.
11. Press MODE “+” several times until the word parameter is displayed on the screen.
12. Double-click the “ENTER” button to enter parameter mode.
13. Using the MODE “+” and “-” buttons to locate the parameter and the DATA “+” and “-” buttons to adjust the individual parameter, set the following parameters:

- 135 = desired RPM
- 605 = 64 (foot modulation On-time)
- 606 = 1 (foot modulation Off-time)

14. (Refer to this step only for Pegasus Machines with a hall effect undertrimmer sensor) Set parameter 011 equal to 131. (011=3 is default)
15. (Refer to this step only for Rimoldi Machines with a hall effect position sensor) Set parameter 520 equal to 1 and parameter 523 equal to 222.
16. Double-click the “ENTER” button to exit parameter mode.
17. Turn off the power.
18. Turn the speed control on the motor to the maximum.
19. Turn on the power.
20. Test RPM of sewing head with tachometer.
21. The sewing speed shouldn’t exceed the setting in parameter 135

Start delay from lifted foot is parameter 603, and is typically set at the factory default.*

Reset sequence for large programmer:

Hold the “A”, “B” and “ENTER” buttons, while turning on the power, wait 5 sec.
Press the enter button.

Parameter programming sequence for large programmer:

Hold the “D” and “ENTER” buttons, while turning on the power, wait 5 sec.
Press the enter button.
Press the backtack buttons (the two buttons on the bottom right of the programmer)
Use the “A” and “B” buttons to locate the parameter (see step 13 above) and “C” and “D” to adjust the individual parameter (see step 13 above)

3.5. Maintenance

NOTE: Always wear proper safety equipment when operating or performing maintenance on any equipment.

It is important that the machine operator read this manual and is familiar with all the functions and safety concerns of the unit before operating.

3.5.1. General Safety Instructions

Maintenance should only be performed by trained, qualified personnel. Before performing any maintenance or repair work, switch off the electrical, pneumatic, etc. power to the machine at the main source and secure it with a padlock so that it cannot be switched on again without authorization. Refer to lockout/tag out procedures

- Always wear proper safety equipment when operating or performing maintenance on any equipment.
- All recommended maintenance is for a single shift schedule; adjust as necessary for a multi-shift operation.
- Equipment should not be used for purposes other than designed or specified.
- The machine shall be switched off, come to a standstill and be secured so that it cannot be switched on again inadvertently before starting any maintenance work whatsoever.
- Use proper lockout/tag out procedures to secure the machine against inadvertent startup.
- Remove any oil, grease, dirt and waste from the machine, particularly from the connections and screws, when starting the maintenance and/or repair work.
- Do not use any corrosive-cleaning agents.
- Use lint-free rags.
- Retighten all screw connections that have to be loosened for the maintenance and repair work.
- Any safety mechanisms that have to be dismantled for setting-up, maintenance or repair purposes must be refitted and checked immediately after completing the work

Preparation

Swing out feed belt and open all machine covers

- Release nut “A” and Remove feeding belt from the sewing Area.
- Release Nut “C” & “D” and remove plate
- Open Sewing machine plates “E” & “F”
- Remove all machine covers

Preventive Maintenance 40 Hrs

		Required Materials
Model:	1996	Oil can
Serial #:		Oil for sewing machine
Operation:	Auto Cuff, Collar, and Waistband	Clean cloth
Sew Head:	Pegasus EX5200	Compressed air
Serial #:		
Needle:	B-27	

Open covers, remove needle plate. With an air gun, blow the machine out and remove accumulated dirt in hard to reach areas.	
Check sharpness of edge trimming knives, chain cutter blades, and guillotine blades. Readjust or replace if needed.	 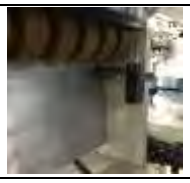
Check all reflective tape for wear and replace if needed. If tape is replaced, readjust eye sensors.	  
Check all air cylinders for correct operating speed. Adjust flow controls if needed. Check pressure regulator and adjust if needed. Main regulator should be set to 80 psi.	 
Check all mechanical assemblies. Tighten loose components if found. Check for tightness or binding in the assemblies' motion.	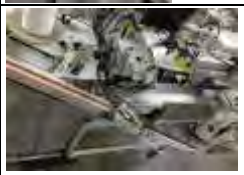
Check tension of all stepping motor belts and sewing motor v-belt, and adjust if necessary.	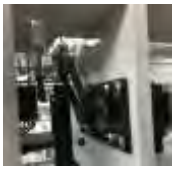  
Check for wear and free rotation of feeding belt.	
Add a drop of oil on all moving parts.	 
.- Perform Daily Maintenance	

Preventive Maintenance 960 Hrs

		Required Materials
Model:	1996	Oil can
Serial #:		Oil for sewing machine
Operation:	Auto Cuff, Collar, and Waistband	Clean cloth
Sew Head:	Pegasus EX5200	Compressed air
Serial #:		
Needle:	B-27	

Remove the oil plug and drain the oil from the sewing head. Replace oil and change oil filter.	
Check filter elements in air regulator and replace if necessary.	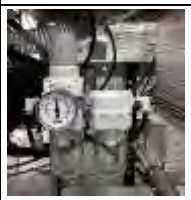
Inspect pillow blocks and other non-sealed bearings (conveyors and rotating shafts), and apply one shot of recommended grease to each bearing/fitting.	
Open or remove doors and/or covers to inspect belt(s) for debris or wear, and clean or replace as necessary.	
Remove the guillotine cover on the clamp side. Remove upper blade guide plate. Check the blade side pocket for grease. Add grease if needed.	
.- Perform Weekly Maintenance	

3.6. Troubleshooting

Problem	Cause:	Corrective action:
Machine will not start when "Start" button is pressed.	1. In "I Roll" mode, at least one loop eye must be covered. In "2 Roll" mode, both eyes must be covered for the machine to start. 2. The "# Bundles" counter must not be on "0". 3. "AUTO/MANUAL/RESET" switch is not in "Auto.	1. Check that the band loop detector eyes are covered. 2. Reset if necessary. 3. Check the "AUTO/MANUAL/RESET" switch is in "Auto". 4. Press "# BUNDLES" reset button.
Machine stops with band held in clamp. Indicates a "Jam" at the seamer. .	1. The band did not clear the seamer eye in 3 seconds.	1. Check seamer and clear the jammed piece. 2. Check the sew eye for proper operation. Check that the needle guard is not up and covering the eye.
Machine stops, cut band falls from clamp.	1. This indicates a thread break.	1. Check for broken thread. Repair thread and reset the machine by moving the "Auto/Manual/Reset" switch from "Auto" to "Manual" and back. 2. Check threading of thread stand and sensors, Sensors must have some tension on the thread to function properly.
Band seam is irregular in shape.	1. Band ends uneven.	1. Adjust flow control on Feed & Cut Assembly. 2. Adjust thumbwheel to align ends evenly.
	1. Seam angles to rear of band.	1. Increase the conveyor speed by adjusting the thumbwheels on the conveyor speed box. 2. Reduce the stitch length. This problem may occur when changing to lighter or limper fabrics that feed faster through the sewing head. 3. Changing the presser foot pressure can also effect this.
	Seam angles to front of band.	1. Decrease conveyor speed by adjusting the thumbwheels. 2. Increase the stitch length. 3. Check band clamp setting. Clamp blade should be set to clamp the band at the end of the band feed stroke. This helps keep the band straight in the conveyor during transfer.
Problem	**Cause:**	**Corrective action:**

Seam angle varies.	1. The transfer band motion is too fast, causing the band to slip crooked as the front conveyor lowers.	1. Slow the transfer down if necessary. 2. Check the timing of the transfer and front conveyor to insure that the front conveyor is down and holding the band before the transfer clamp releases it. 3. The band stop may be set too far to the left allowing the band to slip at the end of the transfer stroke.
Transfer, Cut or Stacker is slow or erratic.	1. The air cylinders may be dry. 2. Air pressure may be low.	1. The air should be shut off and a small amount of light machine oil placed in the fitting on each end of the cylinders. Do not use too much oil. 2. Check the air supply pressure while the machine is running and ensure that you maintain at least 60 psi during operation.
Stacker bottoms out in down stroke.	1. Stacker door "on"' time is too long for the flow control setting.	1. Reduce the value of thumbwheel #6 or readjust the flow controls until the stacker door operates smoothly without bottoming out.
Stacker makes poor stack.	1. Stacker door is too fast or too slow.	1. A fast stacker will cause the band to slide forward and wrinkle. A slow stacker will not have enough speed to flip the top of the band over and it will hang on the stacker door. A stacker adjusted properly will flip the end of the band over flat with little wrinkle.
Band cutter fails to cut band completely.	1. Band is wrinkled under the cutter. 2. The band fold clamp is misadjusted.	1. Adjust band feed flow control so that the bands lie flat as the material is fed. 2. Make sure the feed clamp is down before the band clamp closes. 3. Check spring pressure on knife assembly.
Chain cutter fails to cut chain.	1. Adjustment of chop eye. 2. Chain cutter is jammed or misadjusted.	1. Check adjustment of chop eye. Adjust chop eye position for leading edge cut. 2. Note: Leading edge cut is also the cut between the bands in "2 Roll" mode. 3. Adjust thumbwheel for trailing edge cut. 4. Check knife for mechanical problems or dull blades.
Problem	**Cause:**	**Corrective action:**
Bands do not position properly in front of the	1. Conveyor "Jog"' speed not set properly. 2. Conveyor is not level to the plates.	1. The jog speed of the conveyor determines the positioning of the bands in front of the stacker door.

stacker door prior to stacking.		Adjust the speed potentiometer inside the stepping motor drive box to align the bands with the stacker door. 2. Check the conveyor for gaps between the belt and the plates. Reduce the spring pressure on the conveyor arms.
Bands are not straight at the throat plate before sewing. 	1. Conveyor jog speed may be too fast. 2. Oil film, residue or burrs on the cloth plate causing excessive drag on the bands.	1. Decrease the jog speed by adjusting the internal potentiometer in the stepping motor drive box. 2. Clean the cloth plate to remove the residue. 3. Use emery cloth to remove burrs and smooth the plate surface.

3.6.1. Efka Controller Error

General Information			
On the control	**On the V810**	**On the V820**	**Signification**
A1	InF A1	InF A1	Pedal not in neutral position, when turning the machine on
A2	-StoP- blinking	-StoP- blinking + symbol display	Machine run blockage
A3	InF A3	InF A3	Reference position is not set
A6	InF A6	InF A6	Light barrier monitoring
A7	Symbol blinking	Symbol blinking	Bobbin thread monitor

Programming Functions and Values (Parameters)			
On the control	**On the V810**	**On the V820**	**Signification**
Returns to 000 or to last parameter number	Returns to 0000 or to last parameter number	Like V810 + display InFo F1	Wrong code number or parameter number input

Serious Condition			
On the control	**On the V810**	**On the V820**	**Signification**
E1	InF E1	InF E1	The external pulse encoder e.g. IPG... is defective or not connected.
E2	InF E2	InF E2	Line voltage too low, or time between power off and power on too short.
E3	InF E3	InF E3	Machine blocked or does not reach the desired speed.
E4	InF E4	InF E4	Control disturbed by deficient grounding or loose contact.
E9	InF E9	InF E9	EEPROM defective.

Hardware Disturbance			
On the control	**On the V810**	**On the V820**	**Signification**
H1	InF H1	InF H1	Commutation transmitter cord or frequency converter disturbed.
H2	InF H2	InF H2	Processor disturbed

1. Flow Chart EFKA Error E1

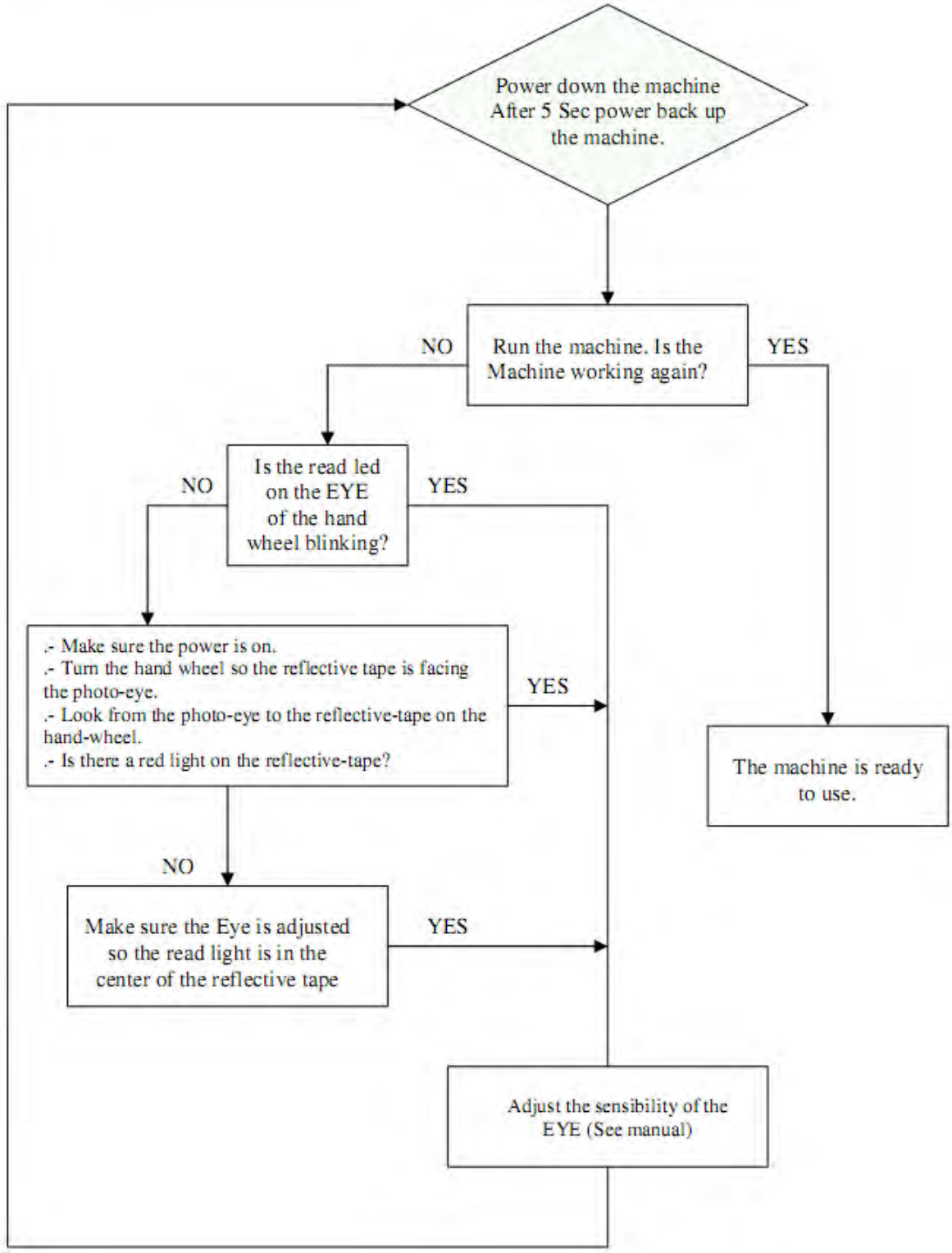

3.6.2. Panasonic D9 Controller Errors

• **Information Error Code and Measurement:**

Error Code	Abnormality Item	Cause of The Problem	Measure
E - 1	•Sewing machine lock	• Sewing machine lock • Needle sensor connector is disconnected •V-Belt has loose tension • Motor connector is disconnected • Trimmer sequence is set improperly	•Check the sewing machine •Connect the needle sensor connector •Tighten the belt(See page 4) •Connect the motor connector •Confirm trimmer sequence
E - 2	•Hardware tripping in control	• Abnormal power supply voltage for control box •High voltage at braking form high speed	•Check the power-supply voltage •Replace the control box to repair the regenerated circuit
E - 3	•Encoder signal of motor sensor is abnormal	• Motor connector is disconnected	•Connect the motor connector •Check the wires of the motor sensor cable
E - 4	• Commutation signal of motor sensor is abnormal	• Motor connector is disconnected	•Connect the motor connector • Check the wires of the motor sensor cable •Replace the motor
E – 5	•Abnormal motor speed	• Abnormal control box	•Replace the control box
E - 6	•Motor over-load or lock	•Machine has heavy load •Motor connector is disconnected	•Check the machine load. If yes, reduce the machine load. •Connect the motor connector.
E - 7	• High voltage supply	• Power supply voltage abnormal	• Exchange control Box
E - 8	•Abnormal Solenoid.	•Solenoid is short-circuited	•Check the solenoid.
E - 10	• Control Box memory is abnormal.	• EEPROM has wrong data.	• Reset EEPROM by using (RESET) node.
E - 11	•Abnormal Communication	•The console is cable was plugged in after power on.	• Plug in the console cable with power off, then power on.
SAFE	Safety Switch	Trimming protection Safety switch broken Safety switch setting incorrect (open or close)	Correct trimming device to be used Check if the switch is damaged Usually set to close, use A14 to adjust.

Atlanta Attachment Company (AAC)

Statement of Warranty

Manufactured Products

Atlanta Attachment Company warrants manufactured products to be free from defects in material and workmanship for a period of eight hundred (800) hours of operation or one hundred (100) days whichever comes first. Atlanta Attachment Company warrants all electrical components of the Serial Bus System to be free from defects in material or workmanship for a period of thirty six (36) months.

Terms and Conditions:

AAC Limited Warranty becomes effective on the date of shipment.
AAC Warranty claims may be made by telephone, letter, fax or e-mail. All verbal claims must be con-firmed in writing.
AAC reserves the right to require the return of all claimed defective parts with a completed warranty claim form.
AAC will, at its option, repair or replace the defective machine and parts upon return to AAC.
AAC reserves the right to make the final decision on all warranty coverage questions.
AAC warranty periods as stated are for eight hundred (800) hours or one hundred (100) days whichever comes first.
AAC guarantees satisfactory operation of the machines on the basis of generally accepted industry standards, contingent upon proper application, installation and maintenance.
AAC Limited Warranty may not be changed or modified and is not subject to any other warranty expressed or implied by any other agent, dealer, or distributor unless approved in writing by AAC in advance of any claim being filed.

What Is Covered

Electrical components that are not included within the Serial Bus System that fail due to defects in material or workmanship, which are manufactured by AAC are covered for a period of eight hundred (800) hours.
Mechanical parts or components that fail due to defects in material or workmanship, which are manufactured by AAC.
Purchased items (sewing heads, motors, etc.) will be covered by the manufacturers (OEM) warranty.
AAC will assist in the procurement and handling of the manufacturers (OEM) claim.

What Is Not Covered

Parts that fail due to improper usage, lack of proper maintenance, lubrication and/or modification.

Damages caused by; improper freight handling, accidents, fire and issues resulting from unauthorized service and/or personnel, improper electrical, plumbing connections.
Normal wear of machine and parts such as Conveyor belts, "O" rings, gauge parts, cutters, needles, etc.
Machine adjustments related to sewing applications and/or general machine operation.
Charges for field service.
Loss of time, potential revenue, and/or profits.
Personal injury and/or property damage resulting from the operation of this equipment.

TRAINING

Activity	Time
SAFETY INSTRUCTION	30 min
INSTALLATION	2 Hr.
OPERATION Emergency Stop ON" Button Stacker Counter Box (Top) Conveyor Speed Box (Middle) Main Control Box (Bottom) Footlift Pedal Sew Pedal Waste System Stacker Roll Holders Sewing Head Sewing Motor Control Boxes	2 Hr.
PREPARATION Cover Removing. Thread Break Detectors. Threading The Sewing Head. Pre-Sewing Test. Load Rolled Or Festooned Rib Knit Programming The Desired Length Programming The Number Of Pieces Programming The Number Of Bundles Start The Machine Sewing	2 Hr.
Maintenance 8hrs	15 min
SERVICE Lockout/tagout program	5 min
MECHANICAL General Alignment. Conveyor Guillotine Band Fold Clamp Band Clamp Transfer Clamp Stacker Chain Cutter	3 Hr.
PNEUMATIC Air Maintenance Unit FR Pressure Regulator Air Filters Venturi Chain & Trim Waste	2 Hr.

Flow control panel Solenoid Valve Stack Manifold Air Pressure Switch Piece Counter Bundle Counter Air Cylinders Blowers	
ELECTRICAL Ground Main Power Contactor. Stacker Counter Box Programming Instructions Conveyor Speed Box (Middle) JOG button Thumbwheels Potentiometer Jumpers Power Main Control Box (Bottom) Operation Mode AUTO Mode. MANUAL Mode. Other Front Panel Switch Functions Electric Eyes Eye #1 Needle Positioning Eye #2: Leading Edge Eye #3: Trailing Edge Cut Eye #4: Lane 1 Roll Material Eye #5: Lane 2 Roll Material Eye Sensor Adjustment Reflective Tape Maintenance Thread Break Detectors. Needle Thread Sensor Motors Conveyor Stepping Motor Band Feed Stepping Motor Loop Motor Sewing Motor	3 Hrs.
MAINTENANCE Preventive Maintenance 40 Hrs. Preventive Maintenance 960 Hrs.	30 Min
TROUBLESHOOTING	1 Hr.

Participants:

_____

_____

_____

_____

Instructor: _____ **Date:** _____

Notes:

Labels

Piece Counter

QTY./BDL.	BDLS	RESET	RESET	PROG	PROG
CANT/PAQ	PAQUETES	REINICIO	REINICIO	PROGRAMA	PROGRAMA

Stepping Motor

INCREASE NUMBER FOR HIGHER SPEED	JOG	POWER
AUMENTE LOS NUMEROS PARA MAS VELOCIDAD	PRUEBA MANUAL	ENCENDIDO

Main Control Box

AUTO	START	CYCLE STOP COV. JOG	MANUAL
AUTOMATICO	INICIO	PARO DE CICLO MOVER CORREA	MANUAL

CLAMP/ FOLD	CLAMP/ TRANSFER	1 ROLL	FEED BAND
PRENSAR / DOBLAR	PRENSAR /TRASFERIR	1 ROLLO	ALIMENTAR BANDA

CUT BAND	2 ROLL	AIR JETS	STACK
CORTAR BANDA	2 ROLLOS	CHORRO AIRE	APILAR

1, 2 & 3 - BAND LENGTH (XX.X") 4 - ADJ. FEED LGTH. TO CLAMP BAND END (.X') 5 - TRAILING EDGE CHAN LENGTH ADJ. 6 - STACKER ON DELAY	PIECE COUNT
1, 2 & 3 – LARGO DE BANDA (XX.X") 4 - AJUSTE LARGO ALIMEN CON LARGO FIN BANDA 5.- LARGO CADENETA EN FINAL DE COSTURA 6.- DEMORA EN APILADOR	CONTADOR DE PIEZAS

Pedal

SEW	FOOTLIFT
COSER	ELEVAR PRENSATELAS

Standard / Metric Reference chart

	Fractions	1/100	mm		Fractions	1/100	mm		Fractions	1/100	mm		Fractions	1/100	mm
	1/32	0.031	0.79		1 17/32	1.531	38.89		3 1/32	3.031	76.99		4 17/32	4.531	115.09
	1/16	0.063	1.59		1 9/16	1.563	39.69		3 1/16	3.063	77.79		4 9/16	4.563	115.89
	3/32	0.094	2.38		1 19/32	1.594	40.48		3 3/32	3.094	78.58		4 19/32	4.594	116.68
1/8	1/8	0.125	3.18		1 5/8	1.625	41.28		3 1/8	3.125	79.38		4 5/8	4.625	117.48
	5/32	0.156	3.97		1 21/32	1.656	42.07		3 5/32	3.156	80.17		4 21/32	4.656	118.27
	3/16	0.188	4.76		1 11/16	1.688	42.86		3 3/16	3.188	80.96		4 11/16	4.688	119.06
	7/32	0.219	5.56		1 23/32	1.719	43.66		3 7/32	3.219	81.76		4 23/32	4.719	119.86
1/4	1/4	0.250	6.35		1 3/4	1.750	44.45		3 1/4	3.250	82.55		4 3/4	4.750	120.65
	9/32	0.281	7.14		1 25/32	1.781	45.24		3 9/32	3.281	83.34		4 25/32	4.781	121.44
	5/16	0.313	7.94		1 13/16	1.813	46.04		3 5/16	3.313	84.14		4 13/16	4.813	122.24
	11/32	0.344	8.73		1 27/32	1.844	46.83		3 11/32	3.344	84.93		4 27/32	4.844	123.03
3/8	3/8	0.375	9.53		1 7/8	1.875	47.63		3 3/8	3.375	85.73		4 7/8	4.875	123.83
	13/32	0.406	10.32		1 29/32	1.906	48.42		3 13/32	3.406	86.52		4 29/32	4.906	124.62
	7/16	0.438	11.11		1 15/16	1.938	49.21		3 7/16	3.438	87.31		4 15/16	4.938	125.41
	15/32	0.469	11.91		1 31/32	1.969	50.01		3 15/32	3.469	88.11		4 31/32	4.969	126.21
1/2	1/2	0.500	12.70		2	2.000	50.80		3 1/2	3.500	88.90		5	5.000	127.00
	17/32	0.531	13.49		2 1/32	2.031	51.59		3 17/32	3.531	89.69		5 1/32	5.031	127.79
	9/16	0.563	14.29		2 1/16	2.063	52.39		3 9/16	3.563	90.49		5 1/16	5.063	128.59
	19/32	0.594	15.08		2 3/32	2.094	53.18		3 19/32	3.594	91.28		5 3/32	5.094	129.38
5/8	5/8	0.625	15.88		2 1/8	2.125	53.98		3 5/8	3.625	92.08		5 1/8	5.125	130.18
	21/32	0.656	16.67		2 5/32	2.156	54.77		3 21/32	3.656	92.87		5 5/32	5.156	130.97
	11/16	0.688	17.46		2 3/16	2.188	55.56		3 11/16	3.688	93.66		5 3/16	5.188	131.76
	23/32	0.719	18.26		2 7/32	2.219	56.36		3 23/32	3.719	94.46		5 7/32	5.219	132.56
3/4	3/4	0.750	19.05		2 1/4	2.250	57.15		3 3/4	3.750	95.25		5 1/4	5.250	133.35
	25/32	0.781	19.84		2 9/32	2.281	57.94		3 25/32	3.781	96.04		5 9/32	5.281	134.14
	13/16	0.813	20.64		2 5/16	2.313	58.74		3 13/16	3.813	96.84		5 5/16	5.313	134.94
	27/32	0.844	21.43		2 11/32	2.344	59.53		3 27/32	3.844	97.63		5 11/32	5.344	135.73
7/8	7/8	0.875	22.23		2 3/8	2.375	60.33		3 7/8	3.875	98.43		5 3/8	5.375	136.53
	29/32	0.906	23.02		2 13/32	2.406	61.12		3 29/32	3.906	99.22		5 13/32	5.406	137.32
	15/16	0.938	23.81		2 7/16	2.438	61.91		3 15/16	3.938	100.01		5 7/16	5.438	138.11
	31/32	0.969	24.61		2 15/32	2.469	62.71		3 31/32	3.969	100.81		5 15/32	5.469	138.91
1	1	1.000	25.40		2 1/2	2.500	63.50		4	4.000	101.60		5 1/2	5.500	139.70
	1 1/32	1.031	26.19		2 17/32	2.531	64.29		4 1/32	4.031	102.39		5 17/32	5.531	140.49
	1 1/16	1.063	26.99		2 9/16	2.563	65.09		4 1/16	4.063	103.19		5 9/16	5.563	141.29
	1 3/32	1.094	27.78		2 19/32	2.594	65.88		4 3/32	4.094	103.98		5 19/32	5.594	142.08
1 1/8	1 1/8	1.125	28.58		2 5/8	2.625	66.68		4 1/8	4.125	104.78		5 5/8	5.625	142.88
	1 5/32	1.156	29.37		2 21/32	2.656	67.47		4 5/32	4.156	105.57		5 21/32	5.656	143.67
	1 3/16	1.188	30.16		2 11/16	2.688	68.26		4 3/16	4.188	106.36		5 11/16	5.688	144.46
	1 7/32	1.219	30.96		2 23/32	2.719	69.06		4 7/32	4.219	107.16		5 23/32	5.719	145.26
1 1/4	1 1/4	1.250	31.75		2 3/4	2.750	69.85		4 1/4	4.250	107.95		5 3/4	5.750	146.05
	1 9/32	1.281	32.54		2 25/32	2.781	70.64		4 9/32	4.281	108.74		5 25/32	5.781	146.84
	1 5/16	1.313	33.34		2 13/16	2.813	71.44		4 5/16	4.313	109.54		5 13/16	5.813	147.64
	1 11/32	1.344	34.13		2 27/32	2.844	72.23		4 11/32	4.344	110.33		5 27/32	5.844	148.43
1 3/8	1 3/8	1.375	34.93		2 7/8	2.875	73.03		4 3/8	4.375	111.13		5 7/8	5.875	149.23
	1 13/32	1.406	35.72		2 29/32	2.906	73.82		4 13/32	4.406	111.92		5 29/32	5.906	150.02
	1 7/16	1.438	36.51		2 15/16	2.938	74.61		4 7/16	4.438	112.71		5 15/16	5.938	150.81
	1 15/32	1.469	37.31		2 31/32	2.969	75.41		4 15/32	4.469	113.51		5 31/32	5.969	151.61
1 1/2	1 1/2	1.500	38.10		3	3.000	76.20		4 1/2	4.500	114.30		6	6.000	152.40

INDEX

Service Instructions

Atlanta Attachment Company Inc.
362 Industrial Park Drive
Lawrenceville, GA 30046
Phone: +1 (770) 963-7369
www.atlatt.com

Printed in USA
Digital Version of this Manual Available at:
http://atlatt.com/tech_manuals.php