Model **1345-6A**

Revision 1.5 Updated Jan 6, 2016

Technical Manual & Parts Lists

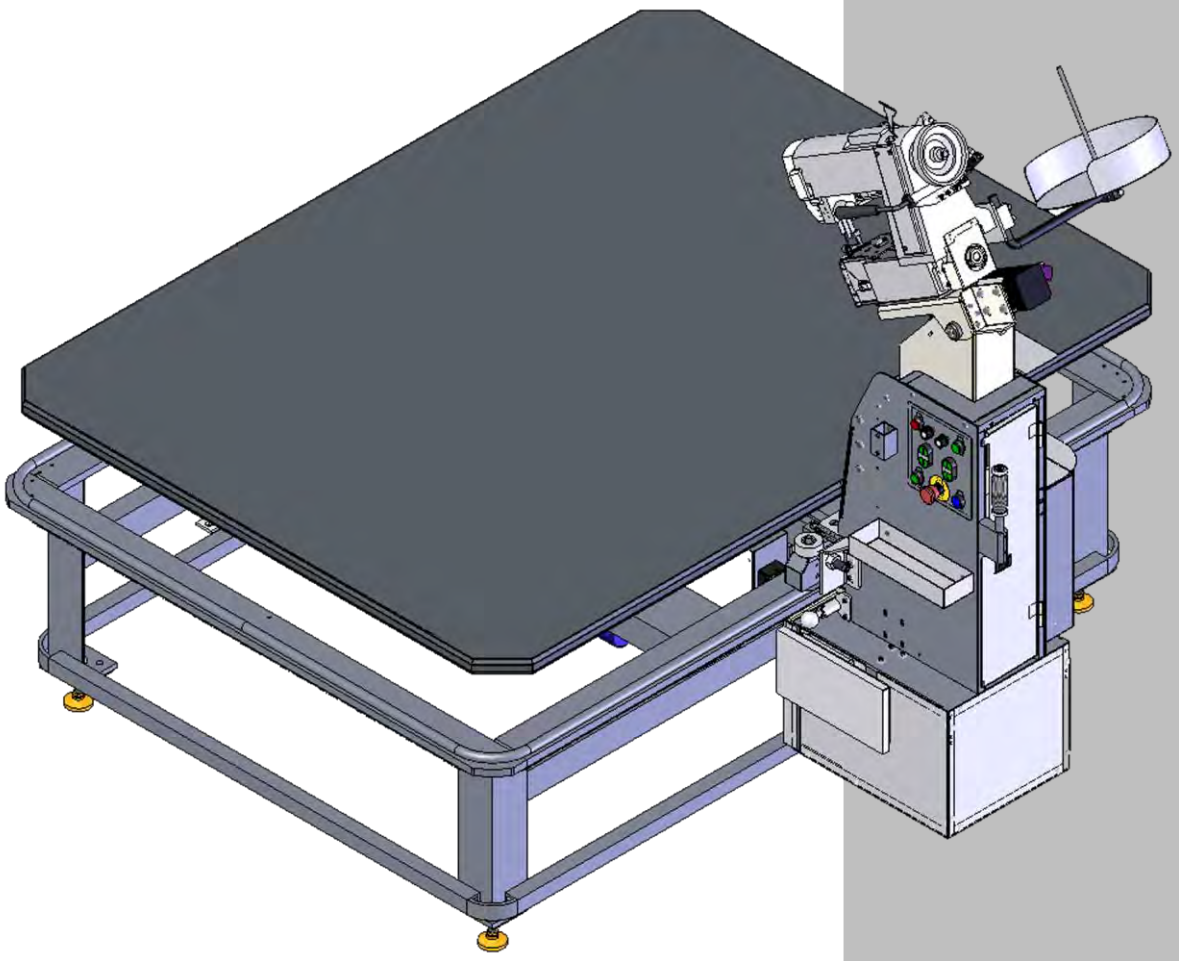

Atlanta Attachment Company

362 Industrial Park Drive

Lawrenceville, GA 30046

770-963-7369 • www.atlatt.com

ATLANTA ATTACHMENT COMPANY, INC.

Confidential and Proprietary Information

The materials contained herein are confidential and proprietary information of Atlanta Attachment Company. In addition to any confidentiality and non-disclosure obligations that currently exist between you and Atlanta Attachment Company, your use of these materials serves as an acknowledgment of the confidential and proprietary nature of these materials and your duty not to make any unauthorized use or disclosure of these materials.

All materials contained herein are additionally protected by United States Copyright law and may not be used, disclosed, reproduced, distributed, published or sold without the express written consent of Atlanta Attachment Company, which consent may be withheld in Atlanta Attachment Company's sole discretion. You may not alter or remove any copyright, trademark or other notice from copies of these materials.

IMPORTANT

It is important to read and understand the information contained within this manual before attempting to operate the machine. Atlanta Attachment Co., Inc. shall not be held liable for damage resulting from misuse of the information presented within, and reserves the right to change the information contained within, without prior notification.

Contents

Important Safety Instruction 1
Liability 2
Safety Equipment on the Machines 3
Protective Eyewear 4
Important Notices 5
Maintenance 7
Repair 8
A Word to the End User 9
Safety Precautions 9
Motor Parameter Settings 10
Instructions for the FP220 with three digit display 10
Instructions for the AB221 with four digit display 11
Servicing the Sew Head 13
Installation 13
Lubrication 14
Setting the Needle 15
Threading the Machine 16
Upper Threading 16
Lower Threading 16
Threading the Loopers 17
Tension 17
Pressure 17
Presser Foot Pressure 17
Alternating Pressers 17
Alternating Presser with Pneumatic Pressure Control 18
Upper Feed Roll Pressure 18
Stitch Length 18
Machine with Puller Feed 19
Presser Bar Lift 19
Machines with Alternating Pressers 20
Setting the Height of Feed Bar 21
Centralizing the Feed Dog 21
Setting the Height of the Feed Dog 21
Timing the Feed Lift Eccentric 22
Needle Bar Positioning 22
Positioning the Loop Deflectors 22

Setting the Distance from the Looper to the Needle 23
Sidewise Setting 23
Lengthwise Setting & Setting the Height of the Needle Bar 23
Timing Looper Driving Crank 24
Setting the Needle Guards 24
Positioning Spreader 25
Sidewise and Height Setting 25
Changing Movement of Spreader 25
Adjusting Needle Thread Take-Up 26
Adjusting Needle Thread Tension Releaser 26
Adjusting Looper Thread Take-Up 26
Singer® 300UX6 Assembly Drawings & Parts Lists 27
Upper Shaft Assembly 29
Front Assembly Sewing Arm 31
External Parts Sewing Arm #1 33
Lower Shaft Assembly 35
Front Assembly Sewing Bed 37
Cross Shaft in Sewing Bed 39
External Parts Sewing Arm #2 41
External Parts Sewing Arm #3 43
External Parts Sewing Arm #4 45
External Parts Sewing Arm #5 47
Installation of Footlift Link & Handle 49
Tools Required 49
Installation 49
Adjustments 49
ASSEMBLY / ADJUSTMENT INSTRUCTIONS 50
Assembly Drawings & Parts Lists 51
11345-6A Tape Edge Machine 52
13451000 Table Base Assembly 53
13452500A Table Assembly 54
134549300A Control Button Panel 55
13452000D Column Lift Assembly 57
13459500 Control Box 59
134563000A Carriage Assembly 61
134543300A Top Carriage Assembly 63
1345100 Knee Switch Assembly 65

13453400A Carriage Guide Assembly 67
134549000B Control Box Assembly 69
134553500D Gear Box Assembly 71
SSIN-300UX6M Sewing Head 73
13453800 Gear Lock Assembly 74
13453600 Column Assembly 75
1345-500 Footlift Pivot Link Assembly 76
1345-6WD1 Wiring Diagram 77

Important Safety Instruction

This part of the Instruction Material is provided for the safe use of your equipment. It contains important information to help work safely with the unit and describes the dangers inherent in machinery. Some of these dangers are obvious, while others are less evident.

Mandatory Information

All persons operating and/or working on the 1345-6A Tape Edge Machine should read and understand all parts of the Safety Instructions. This applies, in particular, for persons who only operate and/or work on the unit occasionally (e.g. for maintenance and repair). Persons who have difficulty reading must receive particularly thorough instruction.

Scope of the Instruction Material

- The Instruction Material comprises:
- Safety information
- Operator Instructions
- Electrical and Pneumatic diagrams

And may also include;

- A list of recommended spare parts
- Instruction Manual(s) for components made by other manufacturers
- The layout and installation diagram containing information for installation

Intended Use

Our machines are designed and built in line with the state of the art and the accepted safety rules. However, all machines may endanger the life and limb of their users and/or third parties and be damaged or cause damage to other property, particularly if they are operated incorrectly or used for purposes other than those specified in the Instruction Manual.

Exclusion of Misuse

Non-conforming uses include, for example, using the equipment for something other than it was designed for, as well as operation without duly installed safety equipment. The risk rests exclusively with the end user.

Conforming use of the machine includes compliance with the technical data, information and regulations in all parts of the complete Instruction Material, as well as compliance with the maintenance regulations. All local safety and accident prevention regulations must also be observed.

Liability

The machine should only be operated when in perfect working order, with due regard for safety and the potential dangers, as well as in accordance with the Instruction Material. Faults and malfunctions capable of impairing safety should be remedied immediately. We cannot accept any liability for personal injury or property damage due to operator errors or non-compliance with the safety instructions contained in this booklet. The risk rests exclusively with the end user.

The Instruction Material should always be kept near the machine so that it is accessible to all concerned.

The local, general, statutory and other binding regulations on accident prevention and environmental protection must also be observed in addition to the Instruction Material. The operating staff must be instructed accordingly. This obligation also includes the handling of dangerous substances and provision/use of personal protective equipment.

The Instruction Material should be supplemented by instructions, including supervisory and notification duties with due regard for special operational features, such as the organization of work, work sequences, the personnel deployed, etc.

The personnel's awareness of the dangers and compliance with the safety regulations should be checked at irregular intervals.

Choice and Qualification of Personnel

Ensure that work on the machine is only carried out by reliable persons who have been appropriately trained for such work - either within the company, by our field staff or at our office - and who have not only been duly appointed and authorized, but are also fully familiar with the local regulations. Work on the machine should only be carried out by skilled personnel, under the management and supervision of a duly qualified engineer.

This not only applies when the machine is used for production, but also for special work associated with its operation (start-up and maintenance), especially when it concerns work on the hydraulic or electrical systems, as well as on the software/serial bus system.

Training

Everyone working on or with the machine should be duly trained and informed with regard to correct use of the safety equipment, the foreseeable dangers which may arise during operation of the machine and the safety precautions to be taken. In addition, the personnel should be instructed to check all safety mechanisms at regular intervals.

Responsibilities

Clearly define exactly who is responsible for operating, setting-up, servicing and repairing the machine. Define the responsibilities of the machine operator and authorize him to refuse any instructions by third parties if they run contrary to the machine's safety. This applies in particular for the operators of machines linked to other equipment. Persons receiving training of any kind may only work on or with the machine under the constant supervision of an experienced operator. Note the minimum age limits permitted by law.

A Word to the Operator

The greatest danger inherent in our machines:
is that of fingers, hands or loose clothing being drawn into a machine by live, coasting or rotating tools or assemblies or of being cut by sharp tools or burned by hot elements.

ALWAYS BE CONSCIOUS OF THESE DANGERS!

Safety Equipment on the Machines

All machines are delivered with safety equipment, which shall not be removed or bypassed during operation.

The correct functioning of safety equipment on machines and systems should be checked every day and before every new shift starts, after maintenance and repair work, when starting up for the first time and when restarting (e.g. after prolonged shutdowns).

If safety equipment has to be dismantled for setting-up, maintenance or repair work, such safety equipment shall be replaced and checked immediately upon completing the maintenance or repair work. All protective mechanisms shall be fitted and fully operational whenever the machine is at a standstill or if it has been shut down for a longer period of time.

Damage

If any changes capable of impairing safety are observed in the machine or its mode of operation, such as malfunctions, faults or changes in the machine or tools, appropriate steps must be taken immediately, the machine switched off and a proper lockout tagout procedure followed. The machine should be examined for obvious damage and defects at least once per shift. Damage found shall be immediately remedied by a duly authorized person before resuming operation of machine.

The machine should only be operated when in perfect working order and when all protective mechanisms and safety equipment, such as detachable protective mechanisms, emergency STOP systems, etc. are in place and operational.

Faults or Errors

The machine must be switched off and all moving or rotating parts allowed to come to a standstill and secured against accidental restart before starting to remedy any faults or errors.

Signs on the Machine

Safety and danger signs on the machine should be observed and checked at regular intervals to ensure that they are complete and undamaged. They should be clearly visible and legible at all times.
Clothing, Jewelry, Protective Equipment
Long loose hair, loose-fitting clothes, gloves and jewelry, including rings, should be avoided in order to avoid injuries due to being caught, drawn in and wound up inside the machine.

Protective Eyewear

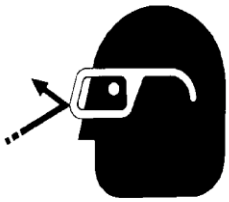

Protective eyewear that has been tested by the local authorities should be worn whenever there is a possibility of loose or flying objects or particles such as when cleaning the machine with compressed air.

Tools

Always count the number of tools in your possession before starting work on the machine. This will allow you to check that no tools have been left behind inside the machine. Never leave a tool in the machine while working.

Oils, Lubricants, Chemicals

Note the applicable safety regulations for the product used.

No Smoking, Fire, Explosion Hazard

Smoking and open flame (e.g. welding work) should be prohibited in the production area due to the risk of fire and explosions.

Workplace

A clear working area without any obstructions whatsoever is essential for safe operation of the machine. The floor should be level and clean, without any waste.

The workplace should be well lit, either by the general lighting or by local lights.

Emergency STOP

The emergency STOP buttons bring all machine movements to a standstill. Make sure you know exactly where they are located and how they work. Try them out. Always ensure easy access to the nearest emergency STOP button while working on the machine.

First Aid

1. Keep calm even when injured.
2. Clear the operator from the danger zone. The decision of what to do and whether to seek additional assistance rests entirely with you, particularly if someone has been trapped.
3. Give First Aid. Special courses are offered by such organizations as the employers' liability insurance association. Your colleagues should be able to rely on you and vice versa.
4. Call an ambulance. Do you know the telephone numbers for the ambulance service, police and fire service?

Important Notices

Reporting and Fighting Fires

Read the instructions posted in the factory with regard to reporting fires and the emergency exits. Make sure you know exactly where the fire extinguishers and sprinkler systems are located and how they are operated. Pass on the corresponding information to the firemen when they arrive. Ensure there are enough signs to avoid fire hazards.

The following fire extinguishers may be used:
- Dry powder extinguishers, ABC fire-extinguishing powder.
- Carbon dioxide fire extinguishers to DIN 14461 for electronic components. Great care must be exercised when using carbon dioxide fire extinguishers in confined, badly ventilated rooms (see DIN 14406 and 14270).

Isolate the machine from the power supply if a fire breaks out. Do not use water on burning electrical parts until it is absolutely certain that they have been completely disconnected from the power supply. Burning oils, lubricants, plastics and coatings on the machine can give off gases and vapors that may be harmful to your health.
A qualified person should be consulted to repair the damage after a fire.

Electrical Power Supply

Before undertaking any maintenance or repair work on the machine, switch off the electrical power to the machine at the main source and secure it with a padlock so that it cannot be switched on again without authorization.
In practice, this may mean that the technician, electrician and operator all attach their own padlock to the master switch simultaneously so that they can carry out their work safely. Locking extension plates should be available for multiple locks if required. The primary purpose for a lockout/tagout procedure is to protect workers from injury caused by unexpected energizing or start-up of equipment.

Energy sources (electrical/pneumatic/hydraulic, etc.) for the equipment shall be turned off or disconnected and the switches locked or labeled with a warning tag. It is the responsibility of the employer to establish control procedures. Follow lockout/tagout procedures before, setup and/or any service or maintenance work is performed, including lubrication, cleaning or clearance of jams.

Caution: The machine is still not completely de-energized even when the master switch is off.

- Electricity - The machine is always isolated from the electrical power supply whenever the master switch has been switched off. However, this does not apply for the power supply in the control cabinet, nor for equipment that does not draw its power via the master switch.

- Pneumatic / hydraulic energy - Almost all our machines carry compressed air. In addition to switching off the master switch, the air supply must also be disconnected and the machine checked to ensure it is depressurized before starting any work on the machine; otherwise the machine may execute uncontrolled movements.

- Kinetic energy - Note that some motors or spindles, for example, may continue to run or coast run on after being switched off.

- Potential energy - Individual assemblies may need to be secured if necessary for repair work.

Delivery of the Machine/Packaging

Note any markings on the packaging, such as weights, lifting points and special information. Avoid temperature fluctuations. Condensation may damage the machine.

Transport Damage

The packaging and machine must immediately be examined for signs of damage in transit. Such damage must be reported to the shipper/transporter within the applicable time limits. Contact Atlanta Attachment Company and/or your transport insurer immediately, if signs of damage are visible. Never operate a damaged machine.

Interim Storage

If the machine has to be stored temporarily, it must be oiled or greased and stored in a dry place where it is protected from the weather in order to avoid damage. A corrosion-inhibiting coating should be applied if the machine has to be stored for a longer period of time and additional precautions taken to avoid corrosion.

Transporting the Machine

Disconnect the machine from all external connections and secure any loose assemblies or parts. Never step under a suspended load. When transporting the machine or assemblies in a crate, ensure that the ropes or arms of a forklift truck are positioned as close to the edge of the crate as possible. The center of gravity is not necessarily in the middle of the crate. Note the accident prevention regulations, safety instructions and local regulations governing transport of the machine and its assemblies.

Only use suitable transport vehicles, hoisting gear and load suspension devices that are in perfect working order and of adequate carrying capacity. Transport should only be entrusted to duly qualified personnel.

Never allow the straps to rest against the machine enclosure and never push or pull sensitive parts of the machine. Ensure that the load is always properly secured. Before or immediately after loading the machine, secure it properly and affix corresponding warnings.
All transport guards and lifting devices must be removed before the machine is started up again. Any parts that are to be removed for transport must be carefully refitted and secured before the machine is started up again.

Workplace Environment

Our machines are designed for use in enclosed rooms: Permissible ambient temperature approx. 5 - 40 °C (40 - 104 °F). Malfunctions of the control systems and uncontrolled machine movements may occur at temperatures outside this range.
Protect against climatic influences, such as electrostatic charges, lightning strikes, hail, storm damage, high humidity, salinity of the air in coastal regions.

Protect against influences from the surroundings: no structure-borne vibrations, no grinding dust, or chemical vapors.
Protect against unauthorized access.
Ensure that the machine and accessories are set up in a stable position.
Ensure easy access for operation and maintenance (Instruction Manual and layout diagram); also verify that the floor is strong enough to carry the weight of the machine.

Local Regulations

Particular attention must be paid to local and statutory regulations, etc. when installing machines and the plant (e.g. with regard to the specified escape routes). Note the safety zones in relation to adjacent machines.

Maintenance

General Safety Instructions

The machine shall be switched off, come to a standstill and be secured so that it cannot be switched on again inadvertently before starting any maintenance work whatsoever. Use proper lockout/tagout procedures to secure the machine against inadvertent startup.
Remove any oil, grease, dirt and waste from the machine, particularly from the connections and screws, when starting the maintenance and/or repair work. Do not use any corrosive-cleaning agents. Use lint-free rags.
Retighten all screw connections that have to be loosened for the maintenance and repair work. Any safety mechanisms that have to be dismantled for setting-up, maintenance or repair purposes must be refitted and checked immediately after completing the work.

Maintenance, Care, Adjustment

The activities and intervals specified in the Instruction Manual for carrying out adjustments, maintenance and inspections must be observed and parts replaced as specified.

All hydraulic and pneumatic lines should be examined for leaks, loose connections, rubbing and damage whenever the machine is serviced. Any defects found must be remedied immediately.

Waste, Disassembly, Disposal

Waste products should be cleared from the machine as soon as possible as not to create a fire hazard. Ensure that fuels and operating lubricants, as well as replacement parts are disposed of in a safe and ecologically acceptable manner. Note the local regulations on pollution control.

When scrapping (disassembling) the machine and its assemblies, ensure that these materials are disposed of safely. Either commission a specialist company familiar with the local regulations or note the local regulations when disposing of these materials yourself. Materials should be sorted properly.

Repair

Replacement Parts

We cannot accept any liability whatsoever for damage due to the use of parts made by other manufacturers or due to unqualified repair or modification of the machine.

Repair, Electrical

The power supply must be switched off (master switch off) and secured so that it cannot be switched on again inadvertently before starting any work on live parts.

Those parts of the machine and plant on which inspection, maintenance or repair work is to be carried out must be isolated from the power supply, if specified. The isolated parts must first be checked to determine that they are truly de-energized before being grounded and short-circuited. Adjacent live parts must also be isolated.

The protective measures implemented (e.g. grounding resistance) must be tested before restarting the machine after all assembly or repair work on electric parts.

Signal generators (limit switches) and other electrical parts on the safety mechanisms must not be removed or bypassed. Only use original fuses or circuit overloads with the specified current rating. The machine must be switched off immediately if a fault develops in the electrical power supply.

The electrical equipment of our machines must be checked at regular intervals and any defects found must be remedied immediately.

If it is necessary to carry out work on live parts, a second person should be on hand to operate the emergency OFF switch or master switch with voltage release in the event of an emergency. The working area should be cordoned off and marked by a warning sign. Only use electrically insulated tools.

Ventilation/Hazardous Gases

It is the end users responsibility to ensure adequate ventilation is provided to exhaust any and all noxious or hazardous gases that may be present in the working environment.

Hydraulic and Pneumatic Systems

Work on hydraulic or pneumatic equipment shall only be carried out by persons with training, knowledge and experience of hydraulic systems. Pressure lines shall be depressurized before starting any repair work.

General Liability

Liability for machine damage and personal injury is extinguished completely if any unauthorized conversions or modifications are undertaken. The machine must not be modified, enlarged or converted in any way capable of affecting safety without the manufacturer's prior approval.

Starting Machine Movements

Read the Instruction Manual carefully to establish which keys and functions start machine movements.

A Word to the End User

The end user has sole responsibility to enforce the use of safety procedures and guards on the machine. Any other safety devices or procedures due to local regulations should be should be retrofitted in accordance to these regulations and/or the EC Directive on the safety of machines.

Operator's position must always be readily accessible. Escape routes must always be kept clear and safety areas should be identified.

Safety Precautions

Safety should be a constant concern for everyone. Always be careful when working with this equipment. While normal safety precautions were taken in the design and manufacture of this equipment, there are some potential safety hazards.
Everyone involved with the operation and maintenance of this equipment should read and follow the instructions in this manual.
Operate the equipment only as stated in this manual. Incorrect use could cause damage to the equipment or personal injury.
It is the owner's responsibility to make certain that the operator reads and understands this manual before operating this equipment. It is also the owner's responsibility to make certain that the operator is a qualified and physically able individual, properly trained in the operation of this equipment.
Specific safety warning decals are located on the equipment near the immediate areas of potential hazards. These decals should not be removed or obliterated. Replace them if they become non-readable.

- ALWAYS keep safety shields and covers in place, except for servicing.
- ALWAYS operate equipment in daylight or with adequate working lights.
- Follow daily and weekly checklists, making sure hoses are tightly secured and bolts are tightened.
- ALWAYS watch and avoid holes or deep depressions.
- ALWAYS wear adequate eye protection when servicing the hydraulic system and battery.
- NEVER operate a poorly maintained machine.
- NEVER allow persons to operate this machine without proper instruction.
- NEVER put hands or feet under any part of the machine while it is running.
- NEVER attempt to make any adjustments or repairs to the machine while running. Repairs or maintenance should be performed by trained personnel only.
- NEVER work under the machine unless it is safely supported with stands, blocks or a hoist and blocks.
- NEVER touch hot parts of machine.

Motor Parameter Settings

There are two models of Efka controllers. The older FP220 had a three digit display. The newer AB221 has a four digit display. Depending on the Efka Controller model, different instructions apply.

Instructions for the FP220 with three digit display

When replacing or installing a new Efka Controller, perform a master reset of the parameters using the following instructions.

***Master Reset of parameters if the Efka Controller has a three digit display:
1. Power on holding down the "P" button till the "COD" is displayed
2. Press ">>" once and enter the number "591"
3. Press "E" twice and "093" is displayed
4. Press "+" once and "094" is displayed
5. Press "P" to exit programming mode
6. Wait till the "ORE" message disappears
7. Press "E" twice to turn off LED 1 and 2
8. Press "+" twice to turn off LED 3 and 4
9. Press ">>" once to turn on LED 7 and off LED 8 so the head stops needle down
10. The new parameters must be saved before turning off power. See instructions below for saving parameters.

***Save Parameters: To save parameters after modifying parameters or doing a Master Reset, the motor should be run at least one revolution. It is normal that sometimes the Sew or Carriage motor rotates the wrong direction. When power is cycled off and back on, the motors will behave correctly. For the Sew Efka, the first few stitches will be very slow because the Efka is detecting the pulley ratio and adjusting automatically.

While the default values of the parameters cause the machine handle most mattresses well, certain parameters may be adjusted to improve performance in special cases.

***Parameters for Sew Efka Controller that has a three digit display:
Parameter 111 sets the max straight sew head speed in RPM. Min is 200, max is 9900, default is 3000 (300 displayed).
Parameter 701 sets the acceleration speed step in RPM / sec which limits the speed up of the sew motor independent of how fast the knee pad is let out. Min is 1000, max is 9990, default is 3300 (330 displayed).
Parameter 702 sets the deceleration speed step in RPM / sec which limits the slowdown of the sew motor independent of how fast the knee pad is pushed in. Min is 1000, max is 9990, default is 9990 (999 displayed).
Parameter 703 sets the max corner sew head speed in RPM. Min is 200, max is parameter 111, default is 1500 (150 displayed).
Parameter 712 holds the software revision number. Do not manually change this value.

***Parameters for Carriage Efka Controller that has a three digit display:
Parameter 111 sets the max normal straight carriage speed in RPM. Min is 200, max is 9900, default is 2700 (270 displayed).
Parameter 701 sets the acceleration speed step in RPM / sec which limits the speed up of the carriage motor independent of how fast the knee pad is let out. Min is 1000, max is 9990, default is 3300 (330 displayed).

Parameter 702 sets the deceleration speed step in RPM / sec which controls the slowdown of the motor independent of how fast the knee pad is pushed in. Min is 1000, max is 9990, default is 9990 (999 displayed).
Parameter 703 sets the max normal corner carriage speed in RPM. Min is 200, max is parameter 111, default is 1300 (130 displayed).
Parameter 704 sets the max glide straight carriage speed in RPM. Min is 200, max is parameter 111, default is 3000 (300 displayed). This parameter is effective only in machines with the "Power Glide" feature.
Parameter 705 sets the max glide corner carriage speed in RPM. Min is 200, max is/ parameter 111, default is 800 (80 displayed). This parameter is effective only in machines with the "Power Glide" feature.
Parameter 712 holds the software revision number. Do not manually change this value.
***Modify Parameters if the Efka Controller has a three digit display:
1. Power on holding down the "P" button till the "COD" is displayed
2. Press ">>" once and enter the number "311"
3. Press "E" once and "2.0.0" is displayed. This is the current parameter number
4. Proceed to the desired parameter and press "E" to display the parameter value
5. Adjust the value and press "E" to return to the parameter number
6. Repeat steps 4 and 5 until all the desired parameters have been modified
7. Press "P" to exit programming mode
8. The new parameters must be saved before turning off power. See instructions above for saving parameters.

Instructions for the AB221 with four digit display

When replacing or installing a new Efka Controller, perform a master reset of the parameters using the following instructions.

***Master Reset of parameters if the Efka Controller has a four digit display:
1. Power on holding down the "P" button till the "CODE" is displayed
2. Press ">>" once and enter the number "5913"
3. Press "E" twice and "093" is displayed
4. Press "+" once and "094" is displayed
5. Press "P" to exit programming mode
6. Wait till the "RES" message is replaced by LED indicators 1, 3, and 5
7. Press "E" twice to turn off LED 1 and 2
8. Press "+" twice to turn off LED 3 and 4
9. Press ">>" once to turn on LED 4 and off LED 5 so the head stops needle down
10. The new parameters must be saved before turning off power. See instructions below for saving parameters.

***Save Parameters: To save parameters after modifying parameters or doing a Master Reset, the motor should be run at least one revolution. It is normal that sometimes the Sew or Carriage motor rotates the wrong direction. When power is cycled off and back on, the motors will behave correctly. For the Sew Efka, the first few stitches will be very slow because the Efka is detecting the pulley ratio and adjusting automatically.

While the default values of the parameters cause the machine handle most mattresses well, certain parameters may be adjusted to improve performance in special cases.

***Parameters for Sew Efka Controller that has a four digit display:

Parameter 111 sets the max straight sew head speed in RPM. Min is 200, max is 9900, default is 3000.
Parameter 701 sets the acceleration speed step in RPM / sec which limits the speed up of the sew motor independent of how fast the knee pad is let out. Min is 1000, max is 9990, default is 3300.
Parameter 702 sets the deceleration speed step in RPM / sec which limits the slowdown of the sew motor independent of how fast the knee pad is pushed in. Min is 1000, max is 9990, default is 9990.
Parameter 703 sets the max corner sew head speed in RPM. Min is 200, max is parameter 111, default is 1500.
Parameter 706 set enables or disables the corner speed pot. Min is 0 (disable), max is 1 (enable), default is 1. If the machine does not have a corner speed pot, this value must be set to 0.
Parameter 712 holds the software revision number. Do not manually change this value.

***Parameters for Carriage Efka Controller that has a four digit display:
Parameter 111 sets the max normal straight carriage speed in RPM. Min is 200, max is 9900, default is 2700.
Parameter 701 sets the acceleration speed step in RPM / sec which limits the speed up of the carriage motor independent of how fast the knee pad is let out. Min is 1000, max is 9990, default is 3300.
Parameter 702 sets the deceleration speed step in RPM / sec which controls the slowdown of the motor independent of how fast the knee pad is pushed in. Min is 1000, max is 9990, default is 9990.
Parameter 703 sets the max normal corner carriage speed in RPM. Min is 200, max is parameter 111, default is 1300.
Parameter 704 sets the max glide straight carriage speed in RPM. Min is 200, max is parameter 111, default is 3000. This parameter is effective only in machines with the "Power Glide" feature.
Parameter 705 sets the max glide corner carriage speed in RPM. Min is 200, max is/ parameter 111, default is 800. This parameter is effective only in machines with the "Power Glide" feature.
Parameter 712 holds the software revision number. Do not manually change this value.

***Modify Parameters if the Efka Controller has a four digit display:
1. Power on holding down the "P" button till the "CODE" is displayed
2. Press ">>" once and enter the number "3112"
3. Press "E" once and "2.0.0" is displayed. This is the current parameter number
4. Proceed to the desired parameter and press "E" to display the parameter value
5. Adjust the value and press "E" to return to the parameter number
6. Repeat steps 4 and 5 until all the desired parameters have been modified
7. Press "P" to exit programming mode
8. The new parameters must be saved before turning off power. See instructions above for saving parameters.

Servicing the Sew Head

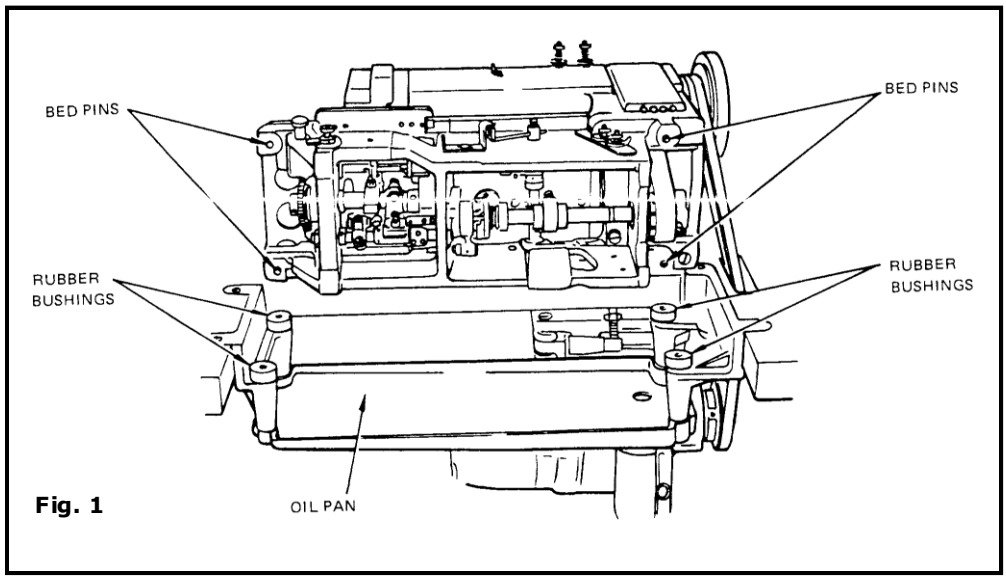

Fig. 1

Installation

Assemble the oil pan to the hangers. Insert the assembled oil pan into the machine cut-out table placing four rubber bushings in the hanger holes as shown in Fig. 1. Attach the oil drain jar to the oil pan as shown in Fig. 2.

Place the machine on the oil pan assembly with the four bed pins passing through the four rubber bushings shown in Fig. 1.

Connect the foot lifter treadle to the foot lifter lever, Fig. 3, at the back of the machine by chain furnished for this purpose.

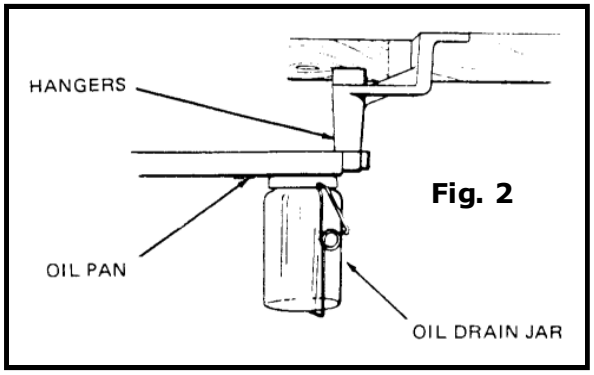

Fig. 2

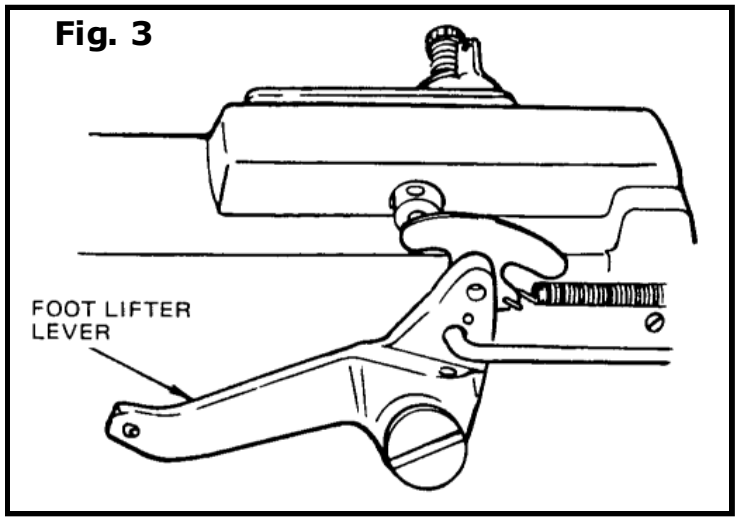

Fig. 3

Lubrication

Machines of Class 300U have a semi-automatic lubricating system comprising of a hollow arm shaft and a hollow bed shaft which act as oil reservoirs. The oil is distributed to all of the principal bearings by centrifugal force through small jets in the shafts when the machine is in operation. Provision is also made for hand lubricating other movable parts which are not lubricated from the reservoirs.

Caution: User Singer Oil, "Type B" or "Type D". Use "Type D" oil when oil is desired which will produce minimum stain on fabrics even after long period of storage.

Do not use additives in sewing machine oil as they may cause a reduction in the normal flow of oil that can result in damage to the machine.

Before starting the machine, the machine must be oiled as instructed. Failure to do this will result in damage to the machine.

The Pressure Oil Can, furnished with the machine is to be used to oil all points requiring lubrication.

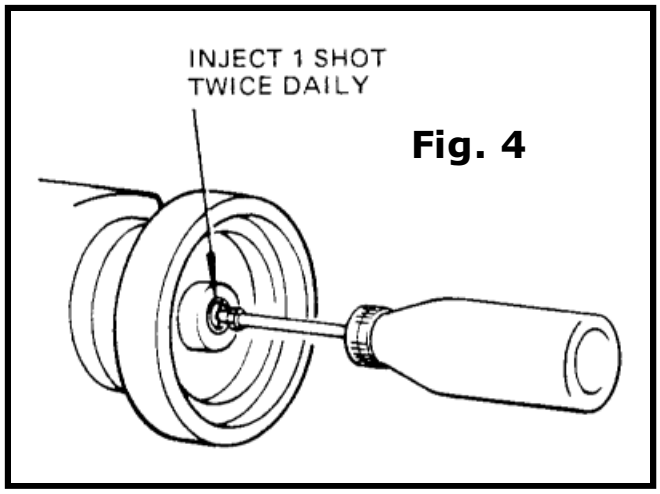

Fig. 4

To Oil the Arm Shaft

To fill the arm shaft reservoir, insert spout of the pressure oil can in hole, Fig. 4, and inject 1 shot of oil into shaft twice daily.

To Oil the Bed Shaft

To fill the bed shaft reservoir, push the spring cover, Fig. 5, to the left and insert spout of pressure oil can into the hole and inject 1 shot of oil into shaft twice daily. Close oil hole spring cover.

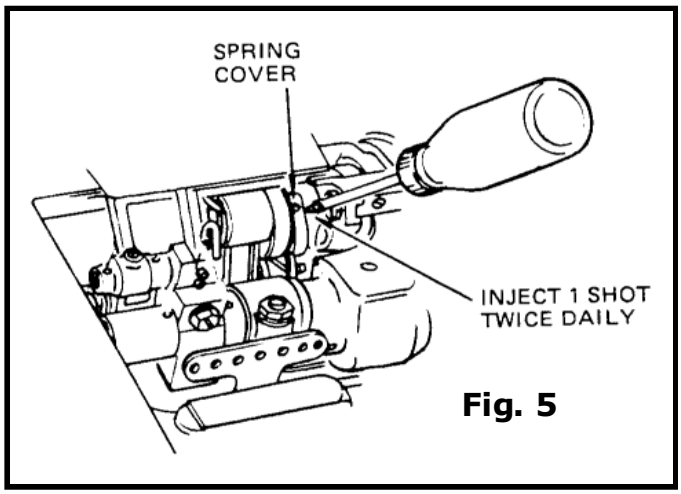

Fig. 5

Other Oiling Points

Applying oil to all work plate and arm oil holes, needle bar bearings and connections, needle bar rock frame bearings, looper rocker sleeve and presser lifting mechanism.

Caution: For machines in continuous use, all oiling points must be oiled daily. Occasionally oil tension release mechanism and looper pull-out rack.

Setting the Needle

Refer to Fig. 6.

Turn the machine pulley over toward the operator until the needle bar is at its highest point.

Loosen the needle set screw.

Insert the needle into the needle bar and clamp as far as it will go making certain that the scarf of the needle faces toward the left.

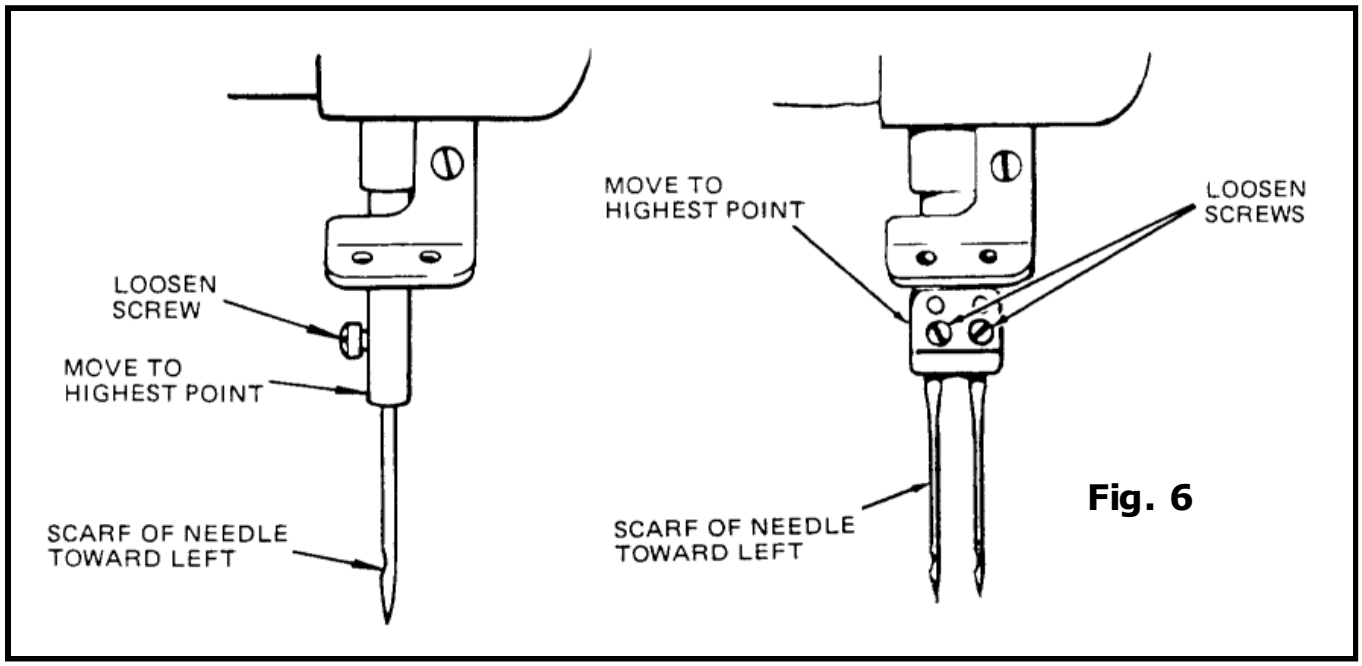

Fig. 6

Threading the Machine

Either left twist or right twist thread may be used in the needles and loopers. Rough or uneven thread or thread which passes through the needle eye with difficulty will interfere with successful operation of the machine.

Upper Threading

Turn the machine pulley over toward the operator until the needle bar is at its highest point. Pass the thread from the unwinder through the threading points indicated in Fig. 7. Draw approximately two inches of thread through the needle eye with which to start sewing. Make certain that each thread passes through the thread tension device.

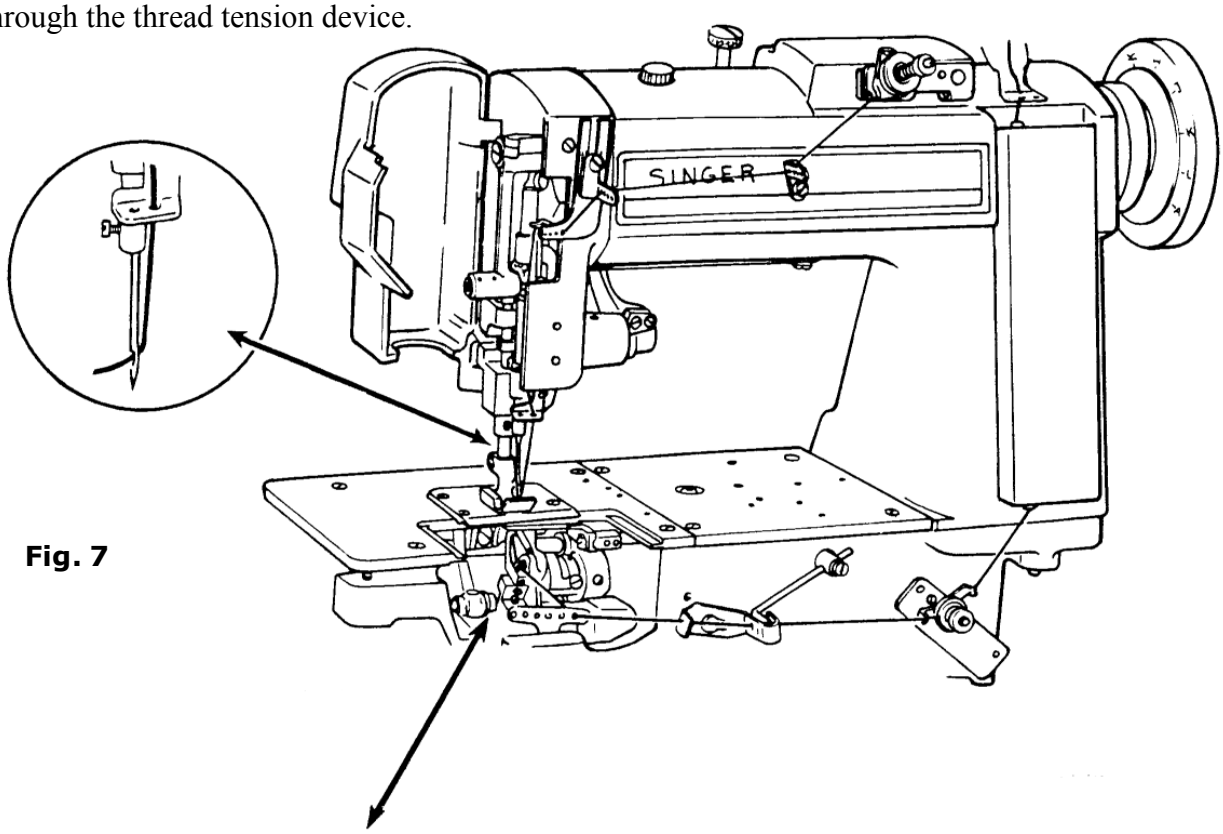

Fig. 7

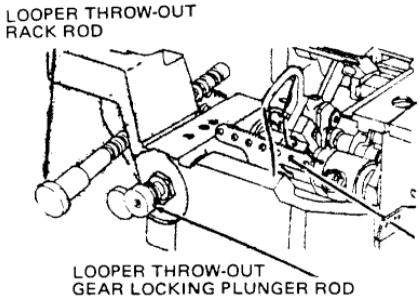

Lower Threading

Open the front table section, remove the bed slide and turn the machine pulley over toward the operator until the needle bar is at its highest point. Move the looper throw-out gear locking plunger rod and looper throw-out rack rod, Fig. 7, out as far as possible. This will place loopers in position for easier threading and prevent accidental operation of machine until loopers are returned to sewing position.

Threading the Loopers

Pass the thread from the unwinder through the threading points as indicated. Draw approximately two inches of thread through the looper eye with which to start sewing.

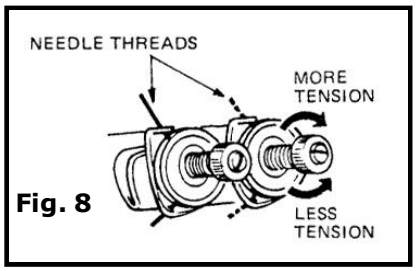

Fig. 8

Tension

Tension on the thread should be as light as possible while still sufficient to set the stitch correctly in material.

Needle Thread Tension

To regulate the needle thread tension, turn the thumb screw indicated in Fig. 8 as may be required.

Important: Regulate the needle thread tension only when the presser foot is down.

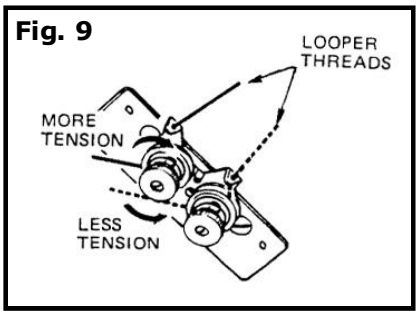

Fig. 9

Looper Thread Tension

To regulate the looper thread tension, turn the thumb screws as indicated in Fig. 9 as may be required.

Pressure

Pressure on material should be as light as possible while still sufficient to insure correct feeding.

Presser Foot Pressure

To regulate the presser foot pressure, loosen the lock screw, Fig. 10, at the rear of the machine. Tighten the thumb screw to increase pressure; loosen to decrease pressure. When the correct feeding pressure is attained, tighten the lock screw.

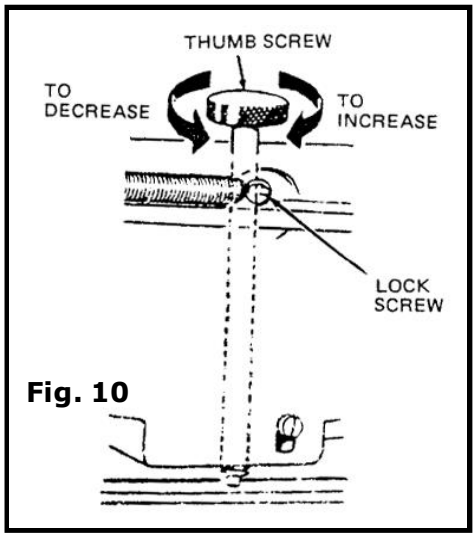

Fig. 10

Alternating Pressers

To increase pressure, loosen the lower lock nut and loosen the lock screw, then tighten the upper lock nut, see Fig. 11. When the correct pressure is attained, tighten the lock screw. Then tighten the lower lock nut. To decrease pressure, loosen the upper lock nut and loosen the lock screw, then tighten the lower lock nut. When correct pressure is attained, tighten the lock screw. Then tighten the upper lock nut.

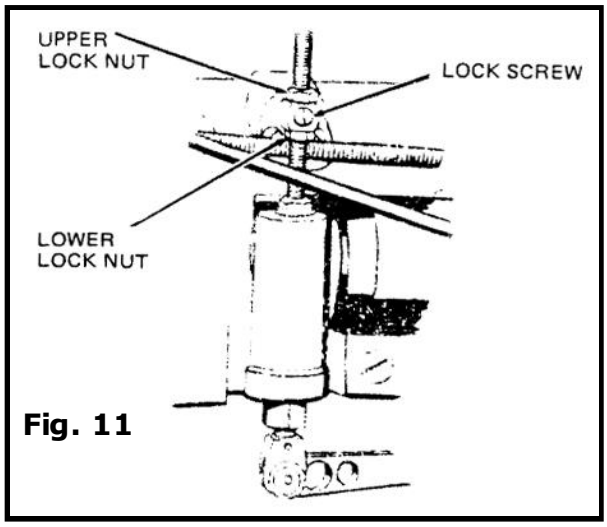

Fig. 11

Alternating Presser with Pneumatic Pressure Control

Adjust the height of the Pressure Cylinder with the presser feet resting on the throat plate. There should be a clearance of 1/4" between the Presser Bar Spring Fork and bottom of the cylinder. To raise the cylinder, loosen the lower lock nut and tighten upper lock nut, see Fig. 12. To lower the cylinder, loosen the upper lock nut and tighten the lower lock nut. When correct adjustment is attained, tighten both lock nuts.

Regulate air pressure: The correct air pressure is set for average feeding when the Presser Bar Spring Fork rises to approximately 1/16" from the bottom of the cylinder.

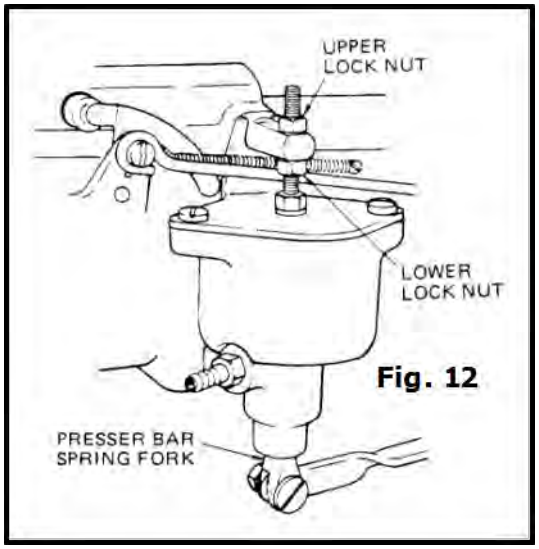

Fig. 12

Upper Feed Roll Pressure

To regulate the pressure of the upper feed roll, turn the thumb screw as shown in Fig. 13.

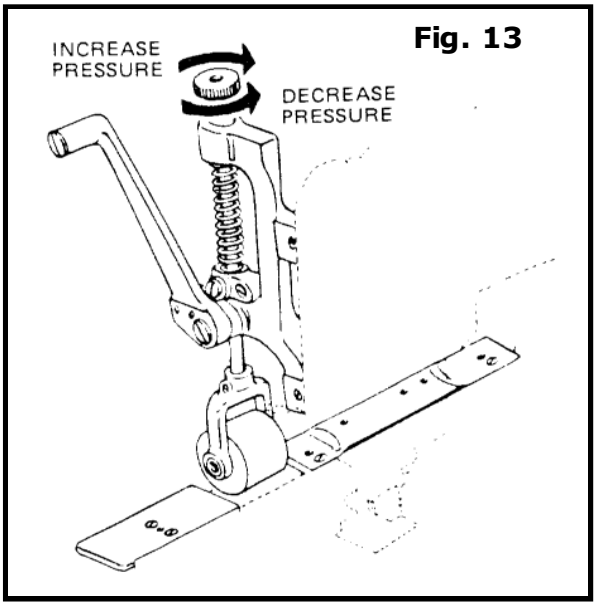

Fig. 13

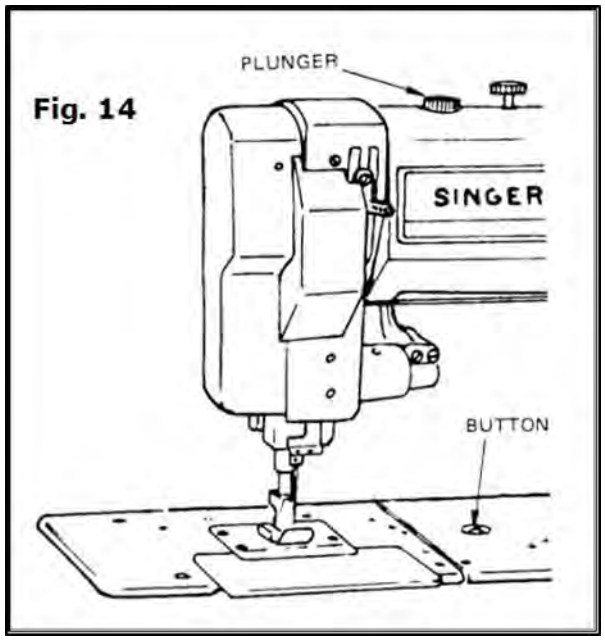

Fig. 14

Stitch Length

To adjust the stitch length, depress the plunger, Fig. 15, located on top of the arm. Continue to hold the plunger down and turn the machine pulley toward the operator until the plunger enters the notch in the arm shaft eccentric. Then turn the plunger to lock in position. Depress the button located on the machine bed. Hold down and turn the machine pulley toward the operator to increase length of the stitch, or away from the operator to decrease the length of the stitch. Letter "A" on the machine pulley indicates the lowest stitch. When desired length is indicated by a letter and is opposite of the arrow on the front of the machine, release button and turn the plunger to the right or left until it springs outward.

Caution: Never turn the machine pulley with the plunger in the locked position until the button on the machine bed is depressed.

Machine with Puller Feed

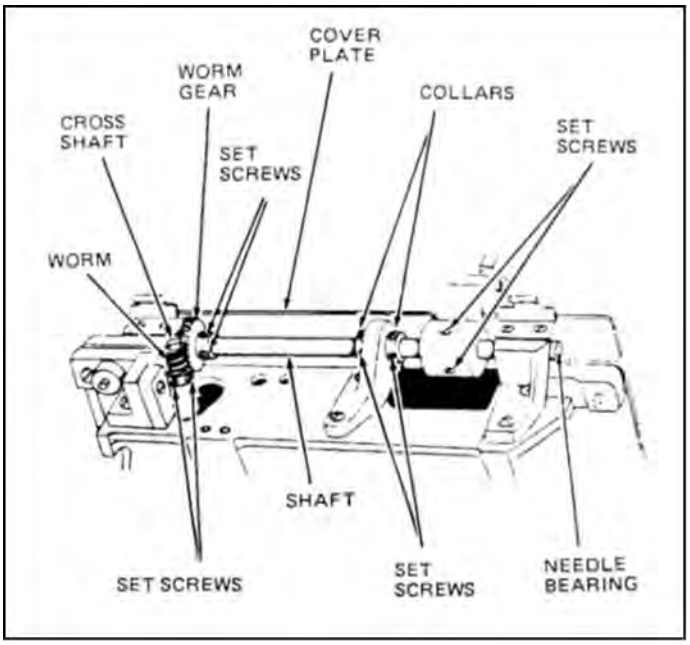

The length of the stitch is determined by the stitch gears in the puller feed mechanism. The compound feed stitch length should be set slightly shorter than the stitch length of the puller feed.

To change the Puller Feed gears for adjusting stitch length, remove the two cover plate screws and remove the cover plate, Fig. 15. Loosen the set screws. Slide the puller feed shaft to the right far enough to allow removal of the worm and worm gear. Place the new worm on the cross shaft. Turn the worm in the operating direction and tighten the first set screw into the flat of the shaft. Then securely tighten both set screws, checking for excessive end play. Engage the new worm gear with the worm and slide the puller feed shaft through the worm gear until the end of the shaft is flush with the needle bearing. Remove the end play in the shaft by setting the two collars against the bracket and tightening the four set screws. Align the lower feed roll with the upper feed roll and tighten the two set screws. Center the worm gear on the center of the worm. Tighten the two set screws with the first screw in the spline of the shaft. Replace the cover plate and adjust the compound feed.

Presser Bar Lift

When the presser foot is raised by the presser bar lifter and the needle is at its highest position, the point of the needle should not protrude below the presser foot.

To adjust, turn the machine pulley over toward the operator until the needle is at its highest position. Loosen the set screw, Fig. 16. Raise the presser foot to the correct height, place the stop collar against the upper bracket, and tighten the set screw.

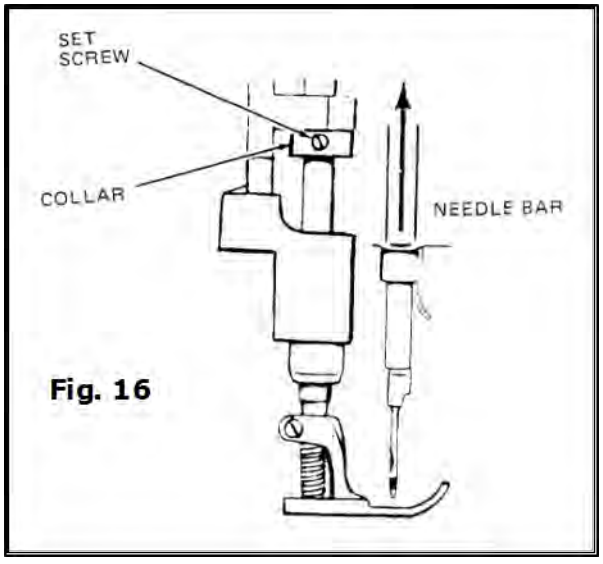

Fig. 16

Machines with Alternating Pressers

The lift of the vibrating and lifting pressers is controlled by an adjustable eccentric. To adjust, remove the arm cover at the rear of the machine. Turn the machine pulley over toward the operator until the feeding presser is down. Loosen the two lock screw, Fig. 17, and the two clamp screws. Insert a screw driver into the notch of the adjusting disc, and turn the machine pulley as indicated in Fig. 17. Then tighten the two clamp screws and the two lock screws.

When it is desirable to have either one of the pressers lift higher than the other, turn the machine pulley over toward the operator until the lifting presser is at its highest position. Loosen the tow clamp screws, Fig. 18, and turn the lifting rock shaft crank up or down until the desired lift of each presser is attained. Then tighten the tow clamp screws.

Caution: Limit lift of pressers to a minimum required for the work, as this permits higher speeds.

The vibrating presser should be timed so that under normal sewing conditions, the presser foot will seat on the material at approximately the same time the needle enters the material. This timing can be advanced or retarded slightly depending on the type of operation being performed, such as sewing over seams. To adjust, loosen the tow holding screws, Fig. 18, not more than one half turn. Then turn the adjustable eccentric, Fig. 17, until the vibrating presser seats at the correct time. Securely tighten the tow holding screws after the adjustment is made.

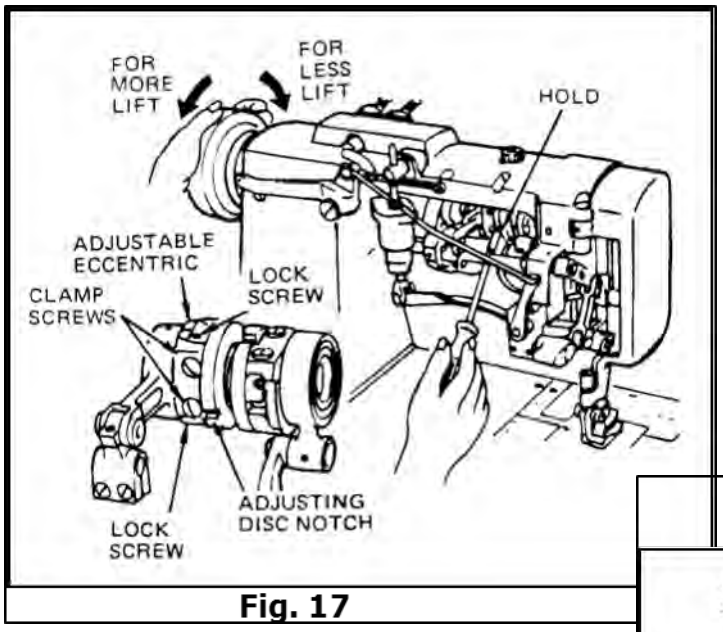

Fig. 17

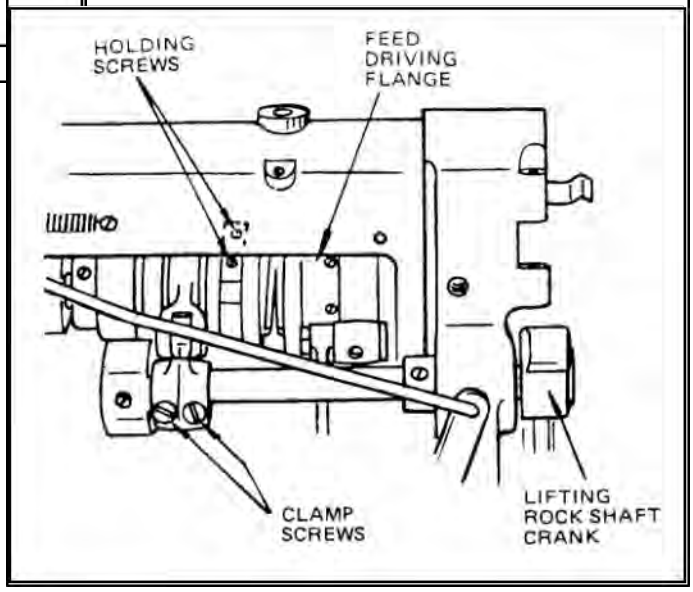

Fig. 18

Setting the Height of Feed Bar

When the feed bar is set at the correct height, the feed lift link clamp will be aligned with the rock shaft timing flat. To adjust, make certain that the feed lifting crank timing screw, Fig. 19, engages the shaft spot correctly. Loosen the clamp screw and move the feed lift clamp link to the correct position. Then tighten the clamp screw.

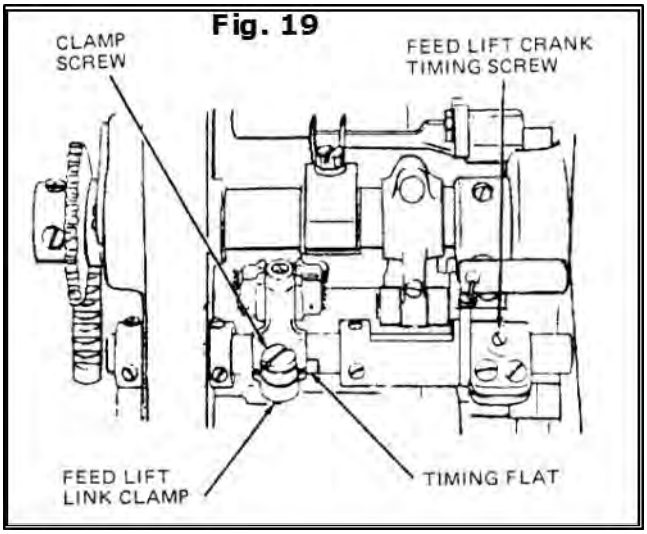

Fig. 19

Centralizing the Feed Dog

Sidewise Setting

The needle should enter the needle hole of the feed dog with the same clearance between the needle and the left or right side of the hole. To adjust, loosen the feed dog screws, Fig. 20. Move the feed dog until the correct clearance is attained. Hold in position, and tighten the feed dog screws.

Additional adjustment, if necessary, may be attained by loosening the four shaft collar set screws, the two rock shaft crank clamp screws, Fig. 20, and the feed lifting clamp screw, Fig. 19. Move the complete assembly to required position and tighten screws.

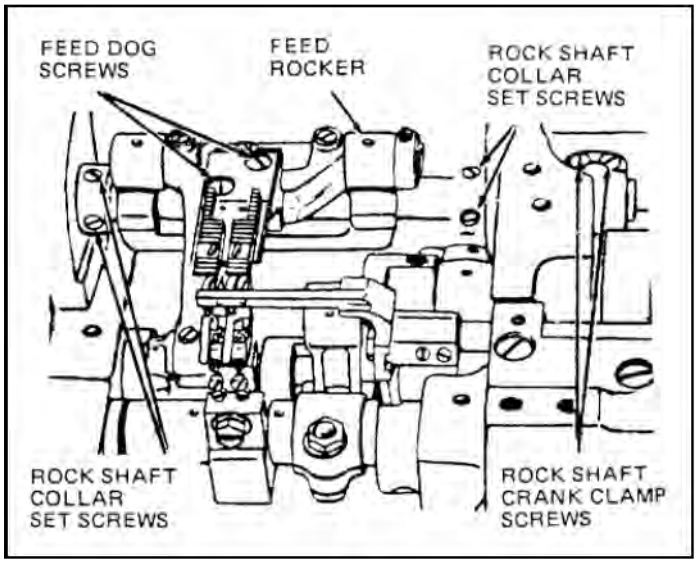

Fig. 20

Lengthwise Setting

The feed dog should clear the ends of the feed slots in the throat plate equally at both ends of the feed travel. To adjust, set the feed for the desired stitch length. Loosen the two rock shaft crank clamp screws, Fig. 20. Move the feed rocker forward or backward until the correct positioning is attained. Then tighten the two clamp screws.

Setting the Height of the Feed Dog

When the feed dog height is set correctly, approximately the full depth of the teeth will show above the throat plate. To adjust, loosen the lock nuts, Fig. 21, and slightly loosen the feed dog clamping screw. To raise the feed dog turn the jack screw clockwise; to lower, turn the jack screw counter-clockwise and tap the feed dog down. When the correct setting is attained, tighten the clamping screws and lock the nuts.

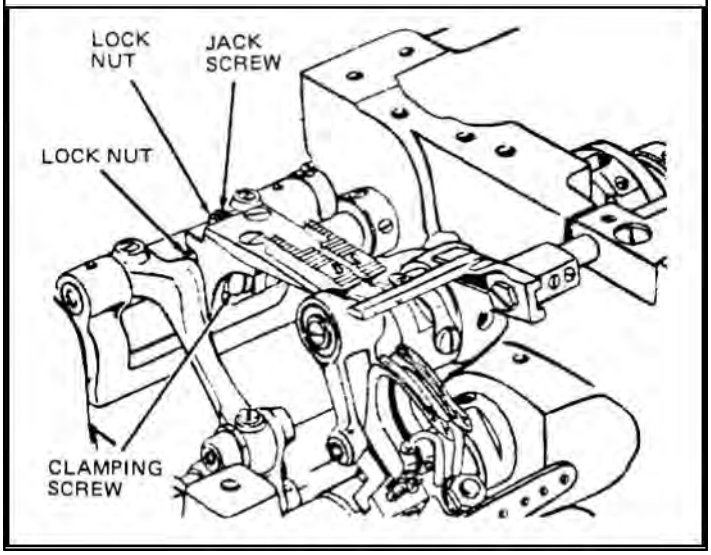

Fig. 21

Timing the Feed Lift Eccentric

When the feed dog is at its highest position, the top of the teeth should be parallel with, and project full depth of the teeth above the upper surface of the throat plate. To adjust, insert screwdriver in the hole in the feed strap and loosen the two set screws, Fig. 22. Move the feed lift eccentric forward for earlier rise of the feed dog, or backwards for later rise. Then tighten the two set screws.

Fig. 22

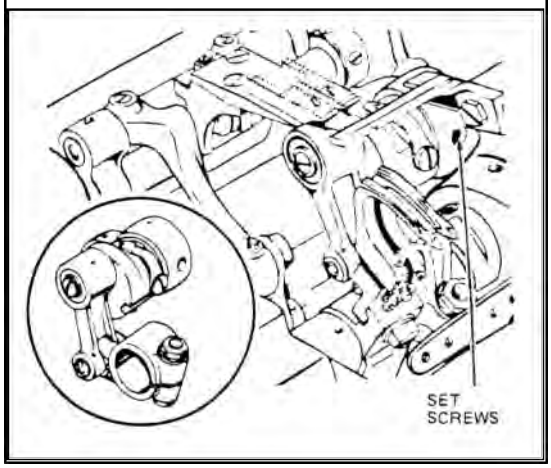

Needle Bar Positioning

The needles should enter the needle holes of the feed dog toward the front with approximately the same clearance between the front of the needles and the front of the needle holes, and the side of the needles to the side of needle holes. To adjust, press the needle bar rock frame, Fig. 23, against the drive arm clamp screws. Continue holding the rock frame against the drive arm, move the needle bar to correct the position and tighten the two clamp screws.

Fig. 23

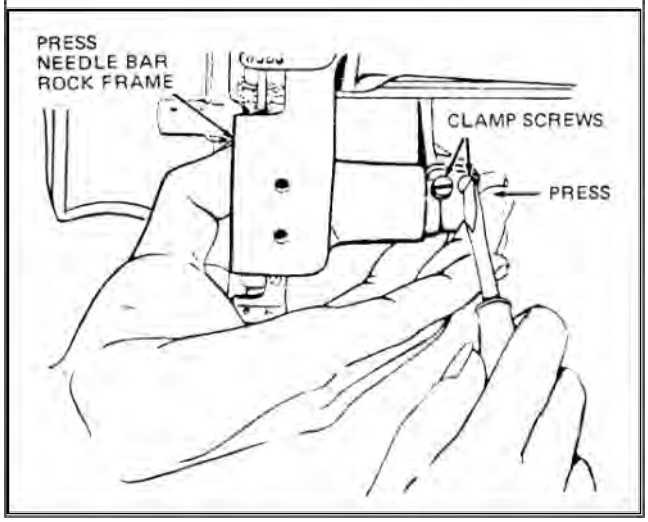

Positioning the Loop Deflectors

When the loop deflector, located on the underside of the feed dog, is positioned correctly, there should be a clearance of approximately 1/32” between the right side of the needle and loop deflector. To adjust, move the looper out of sewing position and tilt the machine back on its hinges. Loosen the loop deflector screws, Fig. 24. Move the deflectors toward the rear of the feed dog as far as the screw slots allow. Tighten slightly to allow for further adjustment. Return the looper to the sewing position and turn the machine pulley until the needle bar has descended to the bottom of the needle bar stroke. Tap the deflector to the left or right until the correct clearance is attained. Move the looper out of the sewing position and tighten the loop deflector screws.

Fig. 24

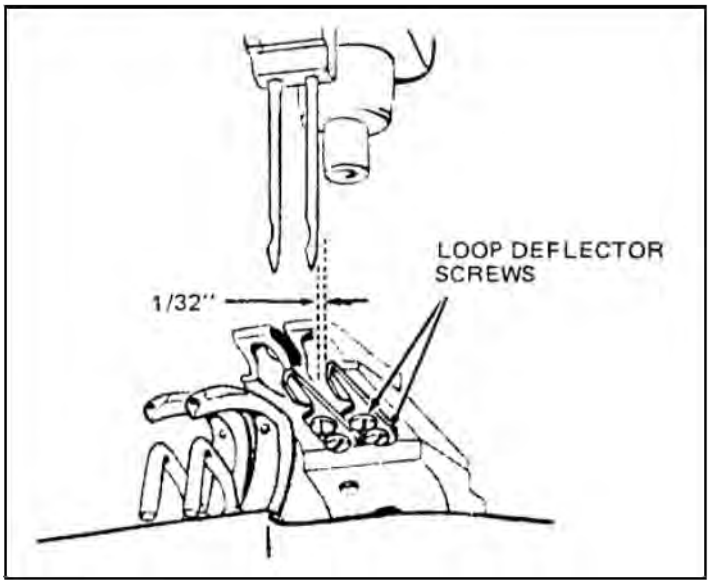

Setting the Distance from the Looper to the Needle

Fig. 25

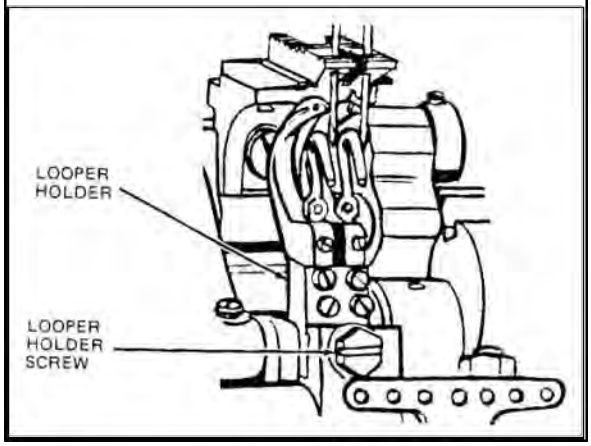

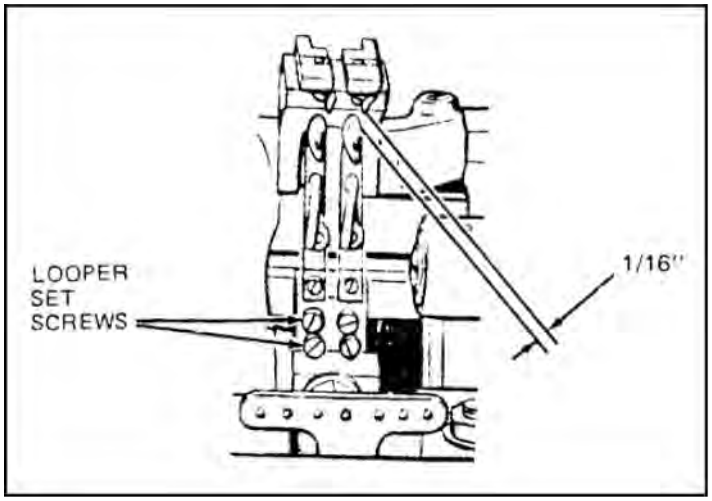

Sidewise Setting

When the looper is correctly positioned, the point of the looper just clears the scarf of the needle on the forward stroke of the looper. To adjust, turn the machine pulley until the looper point is directly opposite of the center of the needle. Loosen the looper holder screw, Fig. 25, and tap the holder to the left or right until the correct clearance is attained. Then securely tighten the looper holder screw.

Move the looper to the extreme forward position. Check the clearance between the heel of the looper and the loop deflector, Fig. 26, which should be approximately 1/16". To adjust, loosen the two looper set screws. Turn the looper to the left or right until the correct clearance is attained. Hold in position and securely tighten the two set screws.

Caution: On single and multi-needle machines, make certain that the point of each looper just clears the scarf of its respective needle. To adjust, with the looper point directly opposite the center of the needle, loosen the two set screw, Fig. 26, and turn the looper slightly to the left or right. Then tighten the set screws.

Lengthwise Setting & Setting the Height of the Needle Bar

Fig. 27

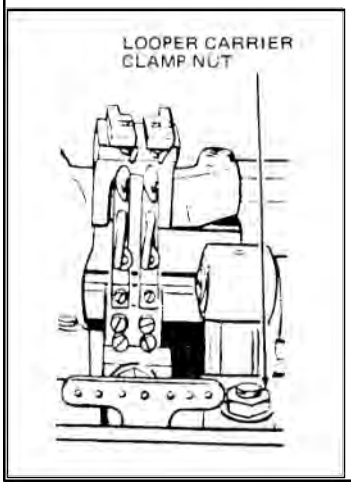

Fig. 28

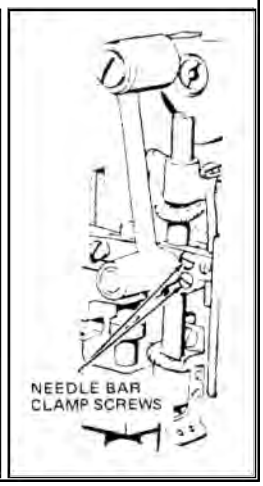

When correctly set: the point of the looper should be directly opposite of the center of the needle, and at the center of the clearance above the eye of the needle when the looper timing mark LT on the machine pulley is opposite of the timing arrow on the arm.

To adjust the looper, loosen the looper carrier clamping nut, Fig. 27. Move the carrier forward or backward until the looper point is directly opposite of the center of the needle. Then tighten the clamping nut.

To adjust the needle bar, first make certain that the needle is inserted up into the needle bar or clamp as far as possible. Loosen the two needles bar clamping screws, Fig. 28, and raise or lower the needle bar to correct position. Then tighten the clamping screws

Timing Looper Driving Crank

When the looper driving crank is properly timed, the point of the looper will pass above the eye of the needle at the same distance on both the forward and backward strokes of the looper.

To adjust when the point of the looper passes higher on the forward stroke, loosen the looper driving crank set screw, Fig. 29. Loosen the looper crank timing screw (left) approximately 1/8 turn, and tighten the looper crank timing screw (right). Continue to adjust until the correct adjustment is made. Then securely tighten the set screw.

When the point of the looper passes higher on the backward stroke, reverse the adjustment by loosening the timing screw (right) and tightening the timing screw (left).

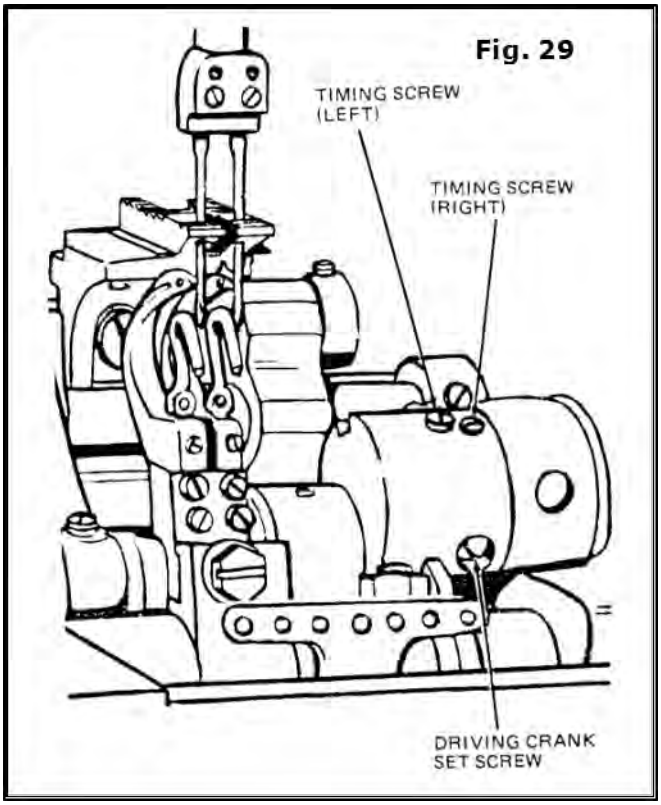

Fig. 29

Setting the Needle Guards

When the needle guards are properly set, they should pass as close as possible to the needles without touching. To adjust the guard turn the machine pulley over toward the operator until the points of the loopers are about to pass the needles on their forward strokes. At this point, the looper timing mark LT on the machine pulley should be approximately 1/8" above the arrow on the machine arm. Loosen the needle guard set screws, Fig. 30. Turn the needle guards as close to the needles as possible without touching. Tighten the set screws. Check by springing the needles to the left and turning the machine pulley to make certain that the looper points do not stroke the needles.

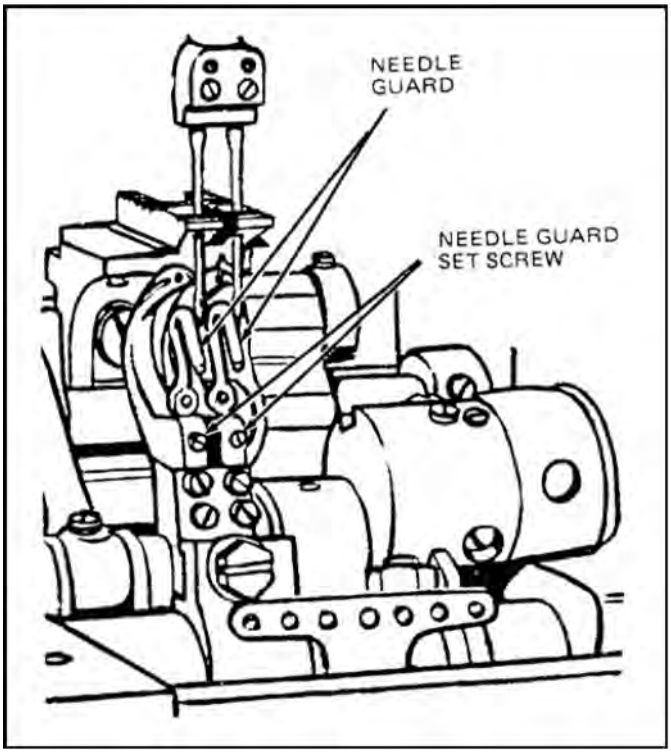

Fig. 30

Positioning Spreader

Fig 31

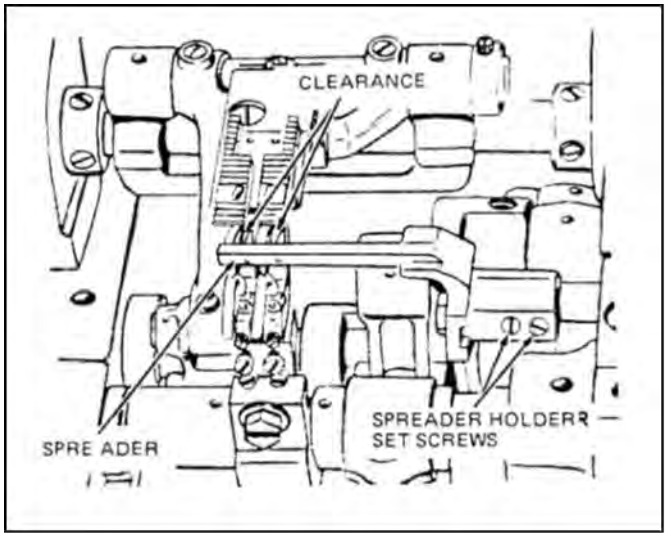

Fig 32

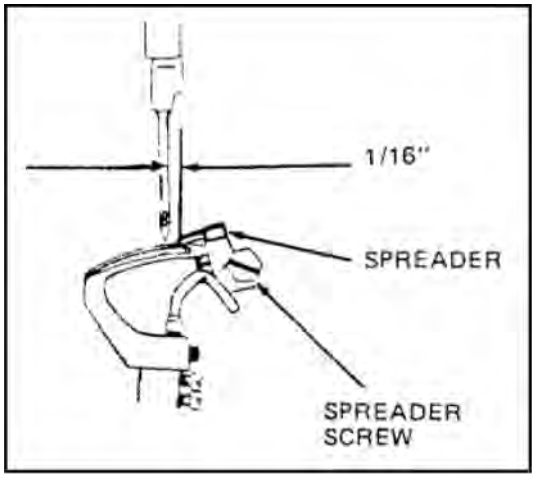

Sidewise and Height Setting

When the looper on its forward stroke is passing the spreader

a) The point of the spreader should be exactly opposite the top of the thread groove at the left side of the looper.

b) The clearance between the spreader point and the looper should be approximately the double thickness of ordinary paper.

To adjust, loosen the two spreader holder set screw, Fig. 31. Move the spreader and holder to the correct position. Hold in position and tighten the set screws.

Lengthwise Setting

When the point of the needle on its downward stroke is even with the point of the spreader, the clearance between the two points should be approximately 1/16". To adjust, loosen the spreader screw, Fig. 32, and move the spreader forward or backward to correct position. Then tighten the spreader screw.

Fig 33

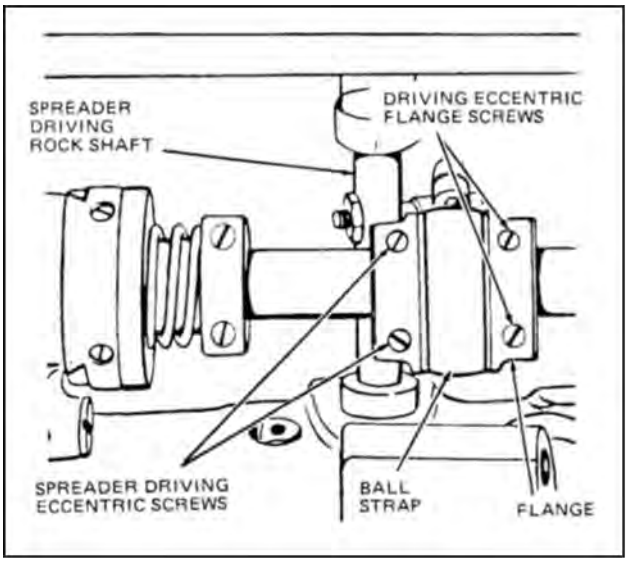

Changing Movement of Spreader

The sidewise movement of the spreader may be adjusted for sewing under abnormal conditions. Under normal conditions, maximum spreader movement is generally used. To adjust, tilt the machine back on its hinges, loosen the two spreader driving eccentric screws, Fig. 33, and the two spreader driving eccentric flange screws. Move eccentric to the left to increase movement, or to the right to decrease movement. When correctly positioned, tighten the two spreader driving eccentric screws first, hold flange against strap and tighten flange screws. Then refer to preceding information regarding positioning of spreader.

Adjusting Needle Thread Take-Up

Fig 34

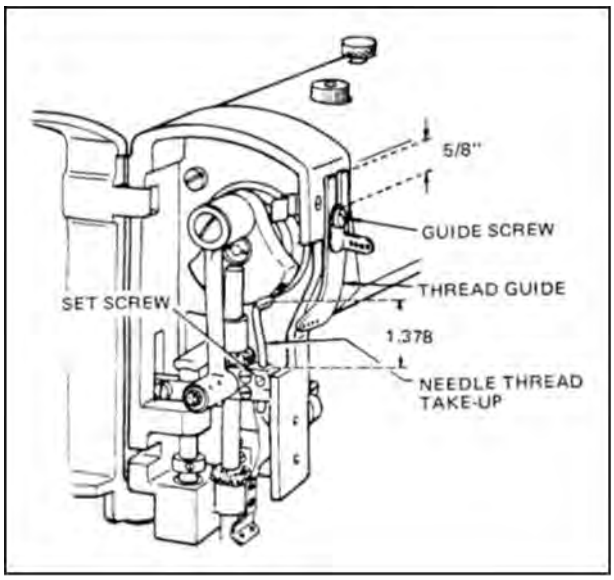

The needle thread take-up and thread guide may be adjusted to increase or decrease the amount of thread drawn at the top of the needle bar stroke. To increase the amount, loosen the thread take-up screw, Fig. 34, and raise the take-up or loosen the guide screw and lower the guide. To decrease the amount, reverse the adjustment by lowering the take-up or raising the guide.

For average sewing conditions, the guide should be set with upper end 5/8" above the guide screw. The thread take-up should be set with the lower end 1.378" below the bottom of its holder.

Adjusting Needle Thread Tension Releaser

Fig 35

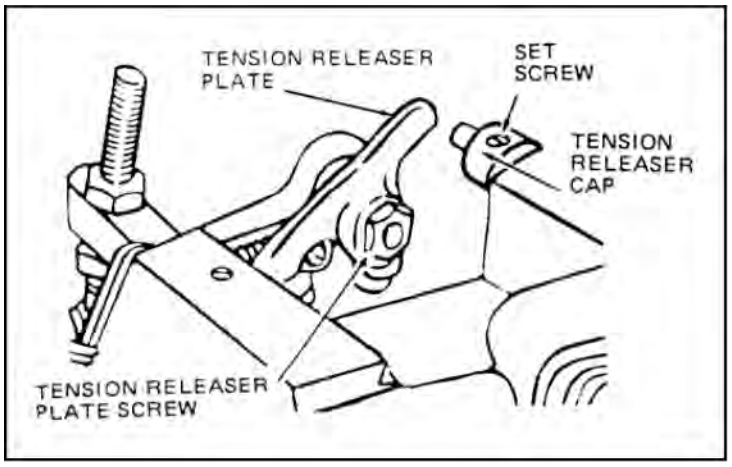

When correctly adjusted, the tension releaser should release tension on the needle thread when the presser foot is raised and allows full adjusted tension when presser foot is down. To adjust, loosen the set screw, Fig. 35, and move tension releaser cap out for earlier release of tension or in for later release. Hold in position and tighten the set screw. Should the tension releaser not release tension at the correct time after making the above adjustments, loosen the tension releaser plate screw and move plate sidewise to correct position. Then tighten the screw.

Adjusting Looper Thread Take-Up

Fig 36

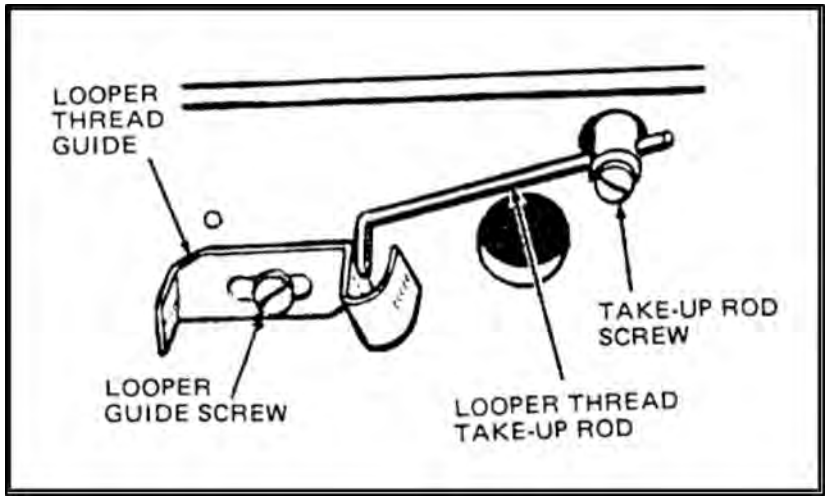

The looper thread take-up and guide may be adjusted for handling more or less thread, according to the thickness of material and length of stitch, and to change the ratio of looper thread in the finished stitch.

To change the amount of thread handled, loosen the looper thread guide screw, Fig. 36, and looper thread take-up rod screw. Move the thread guide and take-up rod to the left for more thread or to the right for less thread. Tighten the two screws making certain that the take-up rod passes through the center of the guide yoke. To change the ratio of looper thread in finished stitch, loosen the thread guide screw, Fig. 36, and lower the yoke or right end of the thread guide for more thread. For less thread, raise the end of the guide. Hold in position and tighten the guide screw.

Singer® 300UX6 Assembly Drawings & Parts Lists

Atlanta Attachment Company is the exclusive
stocking distributor for Singer Tape Edge Sewing Heads
and recommended spare parts for Singer Tape Edge machines.

We can also supply proprietary parts in most cases for
Cash*, Spuhl*, Porter, United* Tape Edge workstations.

Orders may be placed by:
Phone: 770-963-7369
Fax: 770-963-7641
Email: sales@atlatt.com

® A registered trademark of The Singer Company Limited
Copyright © 2000 The Singer Company Limited
All rights reserved throught the world.

*Cash, Spuhl, Porter, and United are the trademarks of their respective companies.

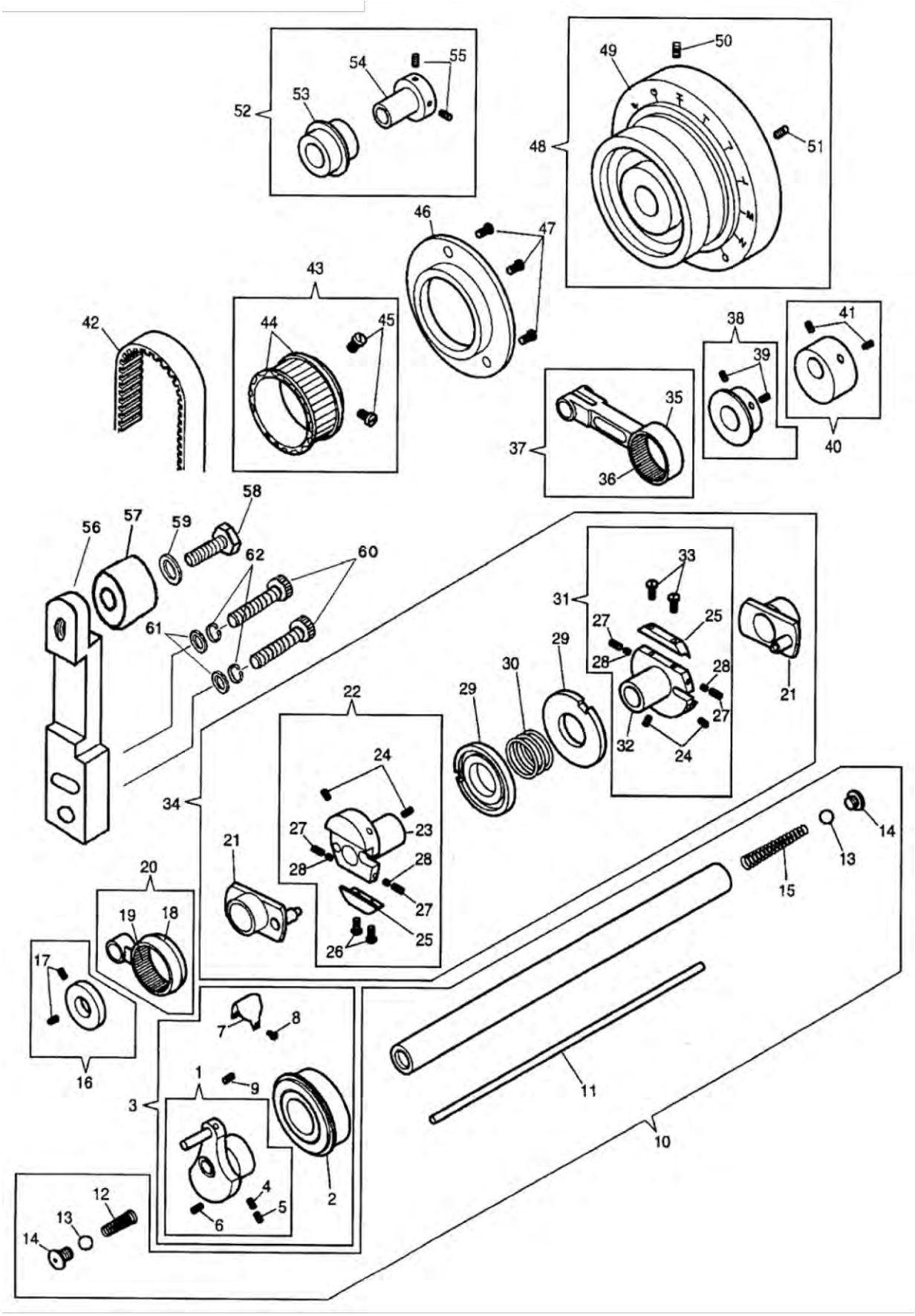
52
53
54
55
48
49
50
51
46
47
43
44
45
42
38
39
41
40
37
35
36
58
56
57
59
62
60
61
31
33
27
25
28
29
30
21
22
24
34
23
20
19
18
17
16
7
8
1
9
3
2
4
5
6
12
13
14
10
11
15

Upper Shaft Assembly

NO.	PART #	DESCRIPTION	NO.	PART #	DESCRIPTION
1	415138	CRANK, NEEDLE BAR	32	415077	LIFTING ECC FLANGE
2	32848	BEARING	33	374098	SCREW
3	2812239	NEEDLE BAR CRANK COMPLETE	34	415081	ECCENTRIC COMP
4	549024	SCREW	35	268491	LIFTING ECCENTRIC
5	544358	SET SCREW	36	271055	FEED DRIVING CONNECTION NEEDLE
6	500272	NEEDLE BAR CRANK SCREW	37	268491	LIFTING ECC CONN
7	281206	CRANK COVER	38	415086	SPACE COLLAR
8	545205451	SCREW, WHITE	39	414529	SCREW
9	281258	NEEDLE BAR CRANK OIL PACKING (	40	281256	BALANCE WEIGHT CPL
10	415128	ARM SHAFT	41	544208005	SCREW
11	268264	ROD, OIL CONTROL	42	268270	CONNECTION BELT
12	415200	SPRING	43	281290	PULLEY
13	268214	BALL, OIL STOP	44	202253	SPRING FLANGE
14	414578	BALL SCREW	45	414546	SCREW
15	268044	SPRING, OIL STOP BALL	46	268004451	HOUSING
16	415308	SPACING COLLAR	47	544336	STUD SCREW
17	414529	SCREW	48	281296467	MACHINE PULLEY (W/414525 & 414
18	271055	FD DRIVE CONN	49	281297467	MACHINE PULLEY
19	271055	FEED DRIVING CONNECTION NEEDLE	50	414525	SCREW
20	267609	FEED DRIVING CONN	51	414526	SCREW
21	267610	FEED DRIVE ECC	52	281294	ARM SHAFT THRUST COLLAR
22	415078	ECCEN FLANGE CPL	53	272142	BALL BEARING
23	415078	ECCENTRIC FRANGE	54	281295001	BED SHAFT THRUST COLLAR
24	414555	SCREW	55	544209005	SET SCREW
25	267623	FRICTION PLATE	56	KE0022	BELT TENSION BRACKET
26	374098	SCREW	57	KE0023	CAM FOLLOWER
27	414557	SCREW	58	KE0074	CAM FOLLOWE SCREW
28	241763	PACKING FIBRE	59	KE0082	CAM FOLLOWER SCREW WASHER
29	268065	ECC ADJUSTING DISC	60	414753004	BELT TENSION BRACKET SET SCREW
30	267618	ADJUSTING DISC SPR	61	270 543803005	WASHER
31	415076	LIFT ECC FLANGE CPL	62	270 543805005	WASHER

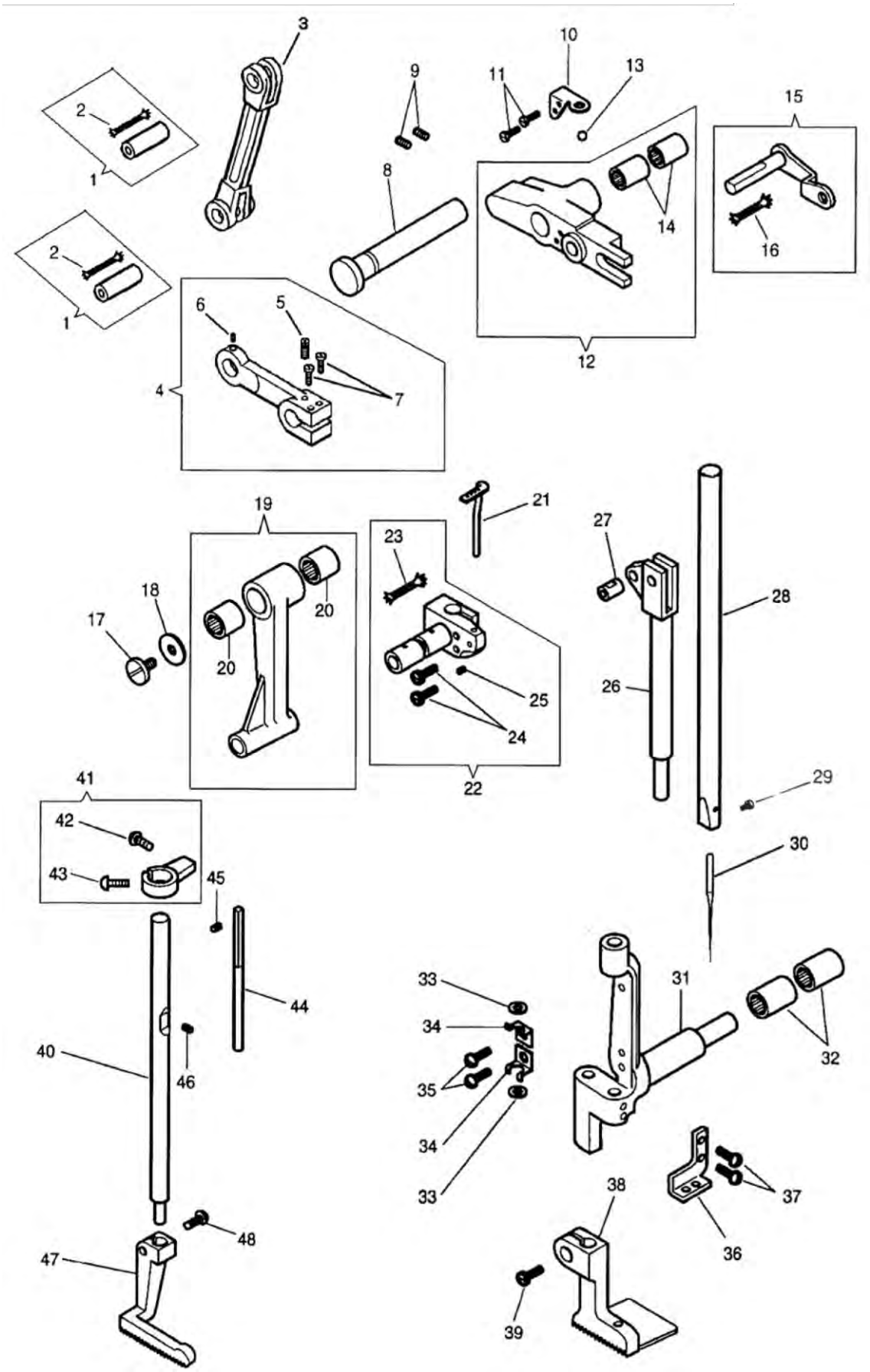
1
2
3
4
5
6
7
8
9
10
11
12
13
14
15
16
17
18
19
20
21
22
23
24
25
26
27
28
29
30
31
32
33
34
35
36
37
38
39
40
41
42
43
44
45
46
47
48

Front Assembly Sewing Arm

NO.	PART #	DESCRIPTION	NO.	PART #	DESCRIPTION
1	267617	LINK HINGE PIN	25	414545	SET SCREW
2	268258	PACKING WICK	26	267657	VIB PRESSER BAR
3	267627	LIFTING LINK	27	267658	VIBRATING PRESSER BAR HINGE ST
4	415061	LIFTING CRANK	28	281912	NEEDLE BAR
5	141338	SCREW	29	414519	SCREW
6	141424	SCREW	30		SINGER NEEDLE 62x59 size 23
7	414511	SCREW	31	415045	FRAME, NEEDLE BAR
8	267626	HINGE STUD	32	268029	NEEDLE BEARING
9	544322	SET SCREW	33	268144	N BAR OILING FELT
10	267718	PRESSER BAR SPRING ARM BALL RE	34	268278	OILING FELT HOLDER
11	414548	RETAINER SCREW	35	414522	SCREW
12	415067	Lifting lever	36	268219	THREAD GUIDE
13	276025	BALL, PRESSER BAR SPRING ARM	37	414539	SCREW
14	KE0008	LIFTING LEVER BUSHING	38	KE0069	VIBRATING PRESSER FOOT
15	267631	PR BAR LIFT CRANK	39	414638	SCREW
16	268258	PACKING WICK	40	267628	LIFTING PR BAR
17	414517	SCREW	41	415059	GUIDE BLOCK
18	268139	WASHER	42	414516	SCREW
19	281916	NEEDLE BAR CONNECTING LINK (30	43	414512	SCREW
20	270266	NEEDLE BEARING (GBH68)	44	267907	GUIDE ROD
21	268512	THREAD GUIDE	45	544301	SCREW
22	281914	NEEDLE BAR CONNECTING STUD CPL	46	414530	SCREW
23	202330	OIL WICK	47	559059	LIFTING PRESSER FOOT
24	414511	SCREW	48	414638	SCREW

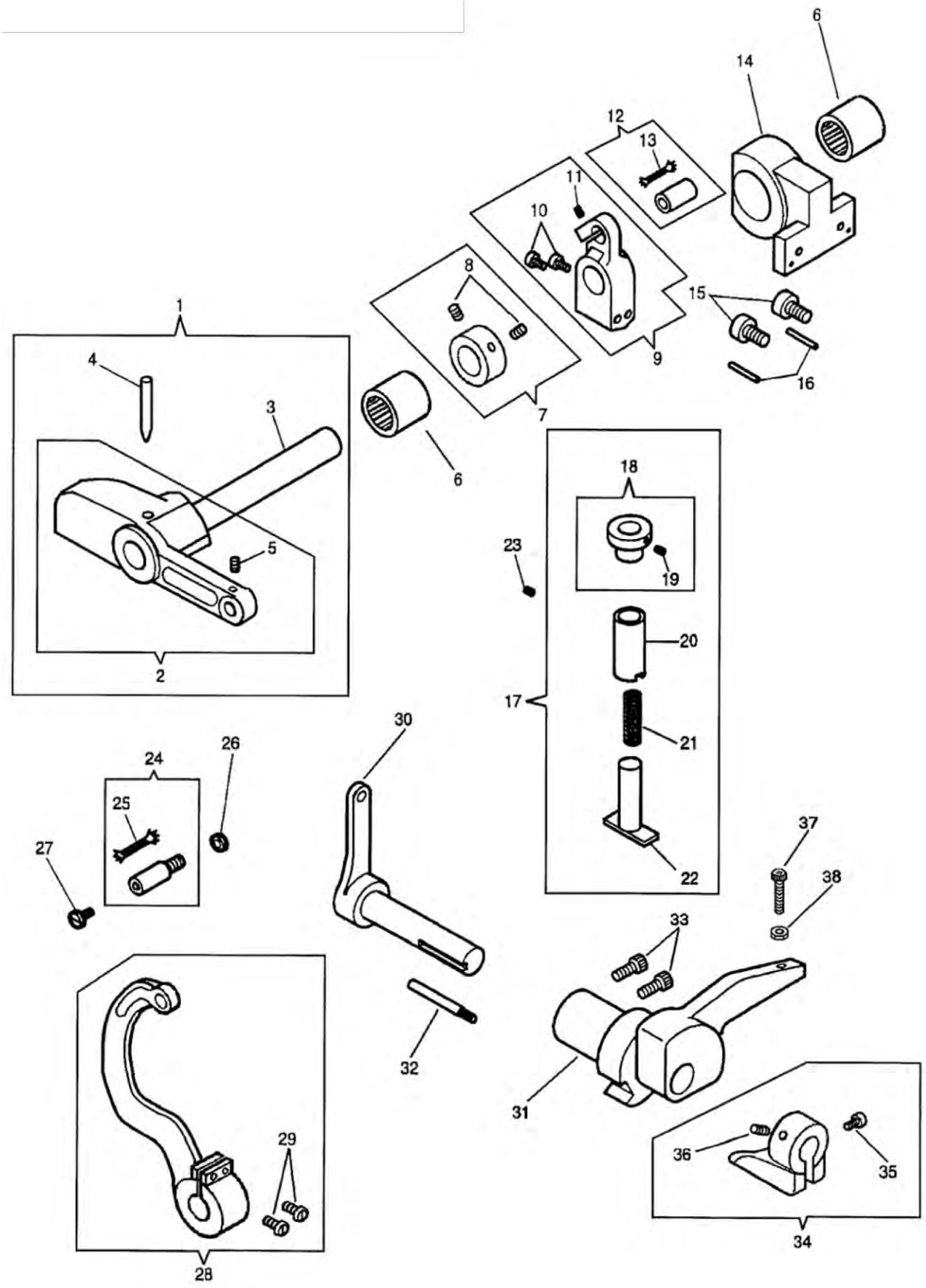
1
2
3
4
5
6
7
8
9
10
11
12
13
14
15
16
17
18
19
20
21
22
23
24
25
26
27
28
29
30
31
32
33
34
35
36
37
38

External Parts Sewing Arm #1

NO.	PART #	DESCRIPTION
1	32788	ROCK SHAFT
2	32788	ROCK SHAFT
3	32789	ROCK SHAFT
4	548035	PIN
5	141424	SCREW
6	267110	NEEDLE BEARING,GBH-78
7	415065	COLLAR COMP
8	504020	SCREW (300UX5)
9	415069	CONN CRANK
10	414509	SCREW
11	374362	SUBSTITUTION REQUIRED
12	267617	LINK HINGE PIN
13	268258	PACKING WICK
14	415071451	LIFTING ROCK SHAFT BRACKET
15	414504	SCREW
16	543841001	PIN
17	415098	STUD COMP
18	415099	STUD CAP
19	414528	SCREW
20	268149	ROCK SHAFT SLEEVE (300UX5)
21	214529	SPRING
22	268148	STUD
23	414527	SCREW
24	415091	HINGE STUD
25	268258	PACKING WICK
26	541197	NUT
27	545297	SCREW
28	415094451	NEEDLE BAR ROCK FRAM DRIVING ARM
29	414790	SCREW
30	267612	CRANK, FOOT LIFT
31	267719452	ARM FULCRUM (WHITE)(HIGH LIFT)
32	414566	SCREW STUD
33	350604	SCREW
34	415122	FT L ARM COMP
35	414509	SCREW
36	545213	SET SCREW
37	414750004	PRESSER BAR SPRING ARM FULCRUM
38	541166001	NUT

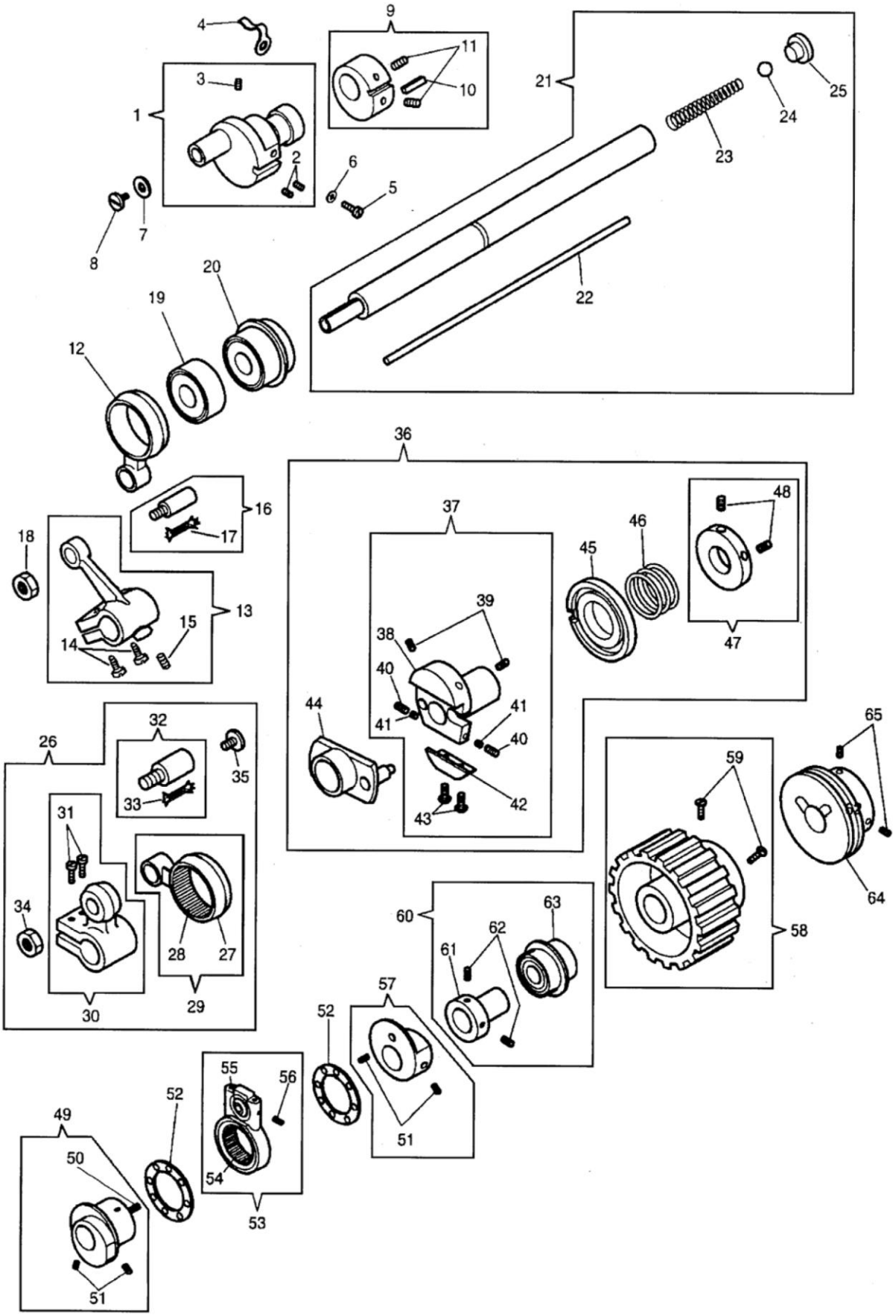
1
2
3
4
5
6
7
8
9
10
11
12
13
14
15
16
17
18
19
20
21
22
23
24
25
26
27
28
29
30
31
32
33
34
35
36
37
38
39
40
41
42
43
44
45
46
47
48
49
50
51
52
53
54
55
56
57
58
59
60
61
62
63
64
65

Lower Shaft Assembly

NO.	PART #	DESCRIPTION	NO.	PART #	DESCRIPTION
1	415176	DRIVE CRANK	34	541197	NUT
2	374099	SCREW	35	545297	SCREW
3	500264833	LOOPER DRIVING CRANK SET SCREW	36	415082	ECCENTRIC COMP
4	268102	COVER, OIL HOLE	37	415073	FEED DRIVING ECC FLANGE
5	414563	SCREW	38	415073	SUBSTITUTION REQUIRED
6	204925	SPRING STUD WASHER(5)	39	414555	SCREW
7	268139	WASHER	40	414557	SCREW
8	200100	SCREW	41	241763	PACKING FIBRE
9	415210	FEED LIFT ECCEN	42	267623	FRICTION PLATE
10	268077	LUBRICATING PAD	43	374098	SCREW
11	544208005	SCREW	44	267610	FEED DRIVE ECC
12	268074	FD LIFT CONNECTION	45	268065	ECC ADJUSTING DISC
13	415206	ROCK SHAFT CRANK	46	268066	ADJUSTING DISC SPR
14	414511	SCREW	47	412011	SPRING COLLAR
15	414549	SCREW	48	544325	SET SCREW
16	415091	HINGE STUD	49	415187	SPREADER DRIVING ECCENTRIC
17	268258	PACKING WICK	50	543808002	PIN
18	541197	NUT	51	414528	SCREW
19	281216	BED SHAFT BALL BEARING	52	268220	THRUST WASHER
20	281224	BED SHAFT BALL BEARING	53	281246001	SPREADER DRIVING ECC CPL
21	559038	BED SHAFT CPL	54	415368	NEEDLE BEARING (300UX5)
22	268265	CONTROL ROD	55	281248	SPRD DR RCK SHFT SCR STD BALL
23	268044	SPRING, OIL STOP BALL	56	544203001	SCREW
24	268214	BALL, OIL STOP	57	415190	COUNTER BALANCE (300UX5)
25	414578	BALL SCREW	58	281292	BED SHAFT CONNECTION BELT PULL
26	415215	DRIVE SHAFT COMP	59	414546	SCREW
27	271055	FD DRIVE CONN	60	281294	ARM SHAFT THRUST COLLAR
28	271055	FEED DRIVING CONNECTION NEEDLE	61	281295001	BED SHAFT THRUST COLLAR
29	267609	FEED DRIVING CONN	62	544209005	SET SCREW
30	415213	SHAFT CRANK	63	272142	BALL BEARING
31	414511	SCREW	64	KE0038	BED SHAFT PULLEY
32	415091	HINGE STUD	65	544209005	SET SCREW
33	268258	PACKING WICK			

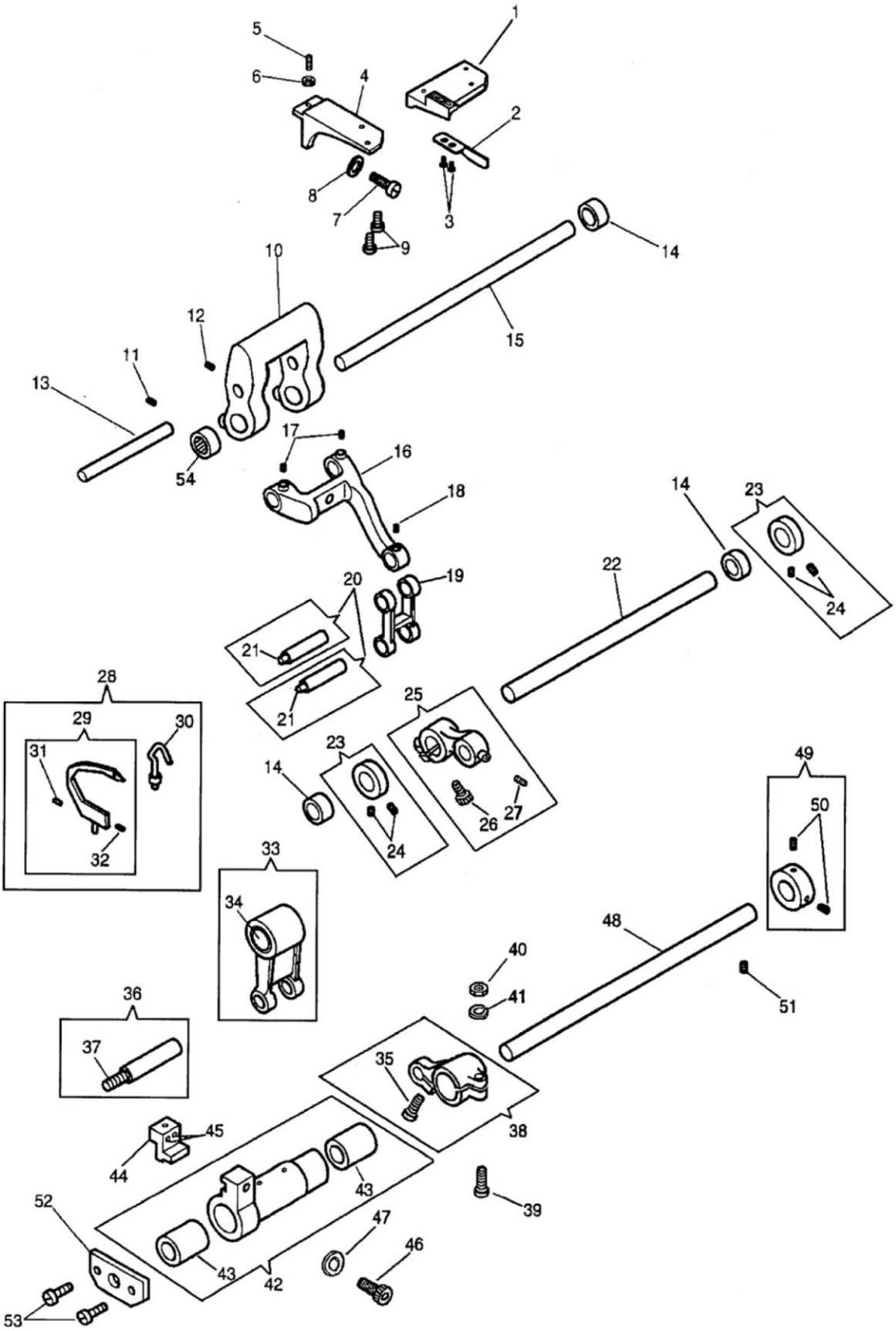
1
2
3
4
5
6
7
8
9
10
11
12
13
14
15
16
17
18
19
20
21
21
22
23
24
23
24
25
26
27
28
29
30
31
32
33
34
35
36
37
38
39
40
41
42
43
43
44
45
46
47
48
49
50
51
52
53
54

Front Assembly Sewing Bed

NO.	PART #	DESCRIPTION	NO.	PART #	DESCRIPTION
1	559061	FEED DOG	28	281208	LOOPER COMPLETE WITH GUARD
2	267665	LOOP DEFLECTOR	29	268382	LOOPER ONLY (ORDER 281207 FOR
3	412176	LINK, CONN CRANK	30	281207	NEEDLE GUARD
4	559064	FEED DOG SHANK	31	141478	SCREW
5	414559	SCREW	32	141494	SCREW
6	541200	LOCK NUT	33	281223	LOOPER DRIVING CONNECTION CPL
7	414750002	SCREW	34	415500	BUSHING
8	543804004	WASHER	35	414516	SCREW
9	374107003	SCREW	36	268208	CRANK HINGE PIN
10	559049	FEED DRIVE ROCK FRAME	37	268258	PACKING WICK
11	549024	SCREW	38	415174	LOOPER CARR CR CPL
12	500264833	FEED DRIVING ROCK FRAME SET SCREW	39	415292	CLAMPING STUD
13	559051	FEED BAR HINGE PIN	40	541198	NUT
14	415297	BUSHING	41	548459	WASHER
15	268070	SHAFT, DRIVE ROCK	42	559041	LOOPER CARRIER
16	559045	FEED BAR	43	415500	BUSHING
17	270 544204001	SCREW	44	559055	LOOPER HOLDER CPL
18	545213	SET SCREW	45	414558	SCREW
19	268078	FEED LIFTING LINK	46	414750002	SCREW
20	268079	LINK HINGE PIN	47	543804004	WASHER
21	268258	PACKING WICK	48	269617	CARRIER SHAFT
22	559052	FEED LIFTING ROCK SHAFT	49	415172	SHAFT COLLAR
23	415065	COLLAR COMP	50	270 544204001	SCREW
24	504020	SCREW (300UX5)	51	544209003	SCREW
25	415204	CRANK	52	559044	LOOPER CARRIER SHAFT SUPPORTIN
26	414501	SCREW	53	200100	SCREW
27	545213	SET SCREW	54	415297	NEEDLE BEARING

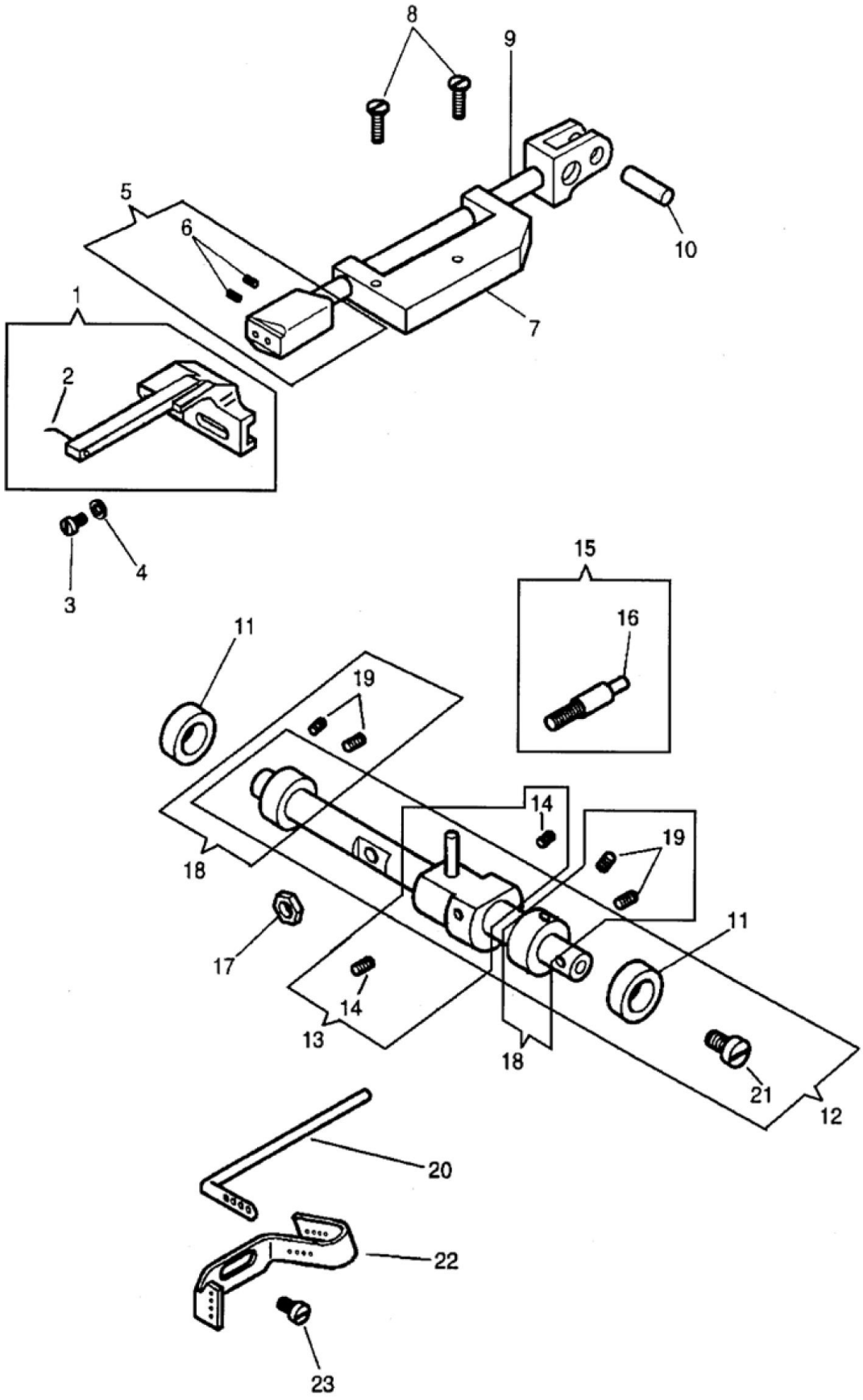
8
9
5
6
10
1
7
2
3
4
15
16
11
19
18
14
19
17
11
14
13
18
21
12
20
22
23

Cross Shaft in Sewing Bed

NO.	PART #	DESCRIPTION
1	281975	SPREADER
2	268162	SPREADER POINT
3	414552	SCREW
4	547670	WASHER
5	415196	SPREADER HOLDER
6	414529	SCREW
7	268184	SPREADER BAR BRACKET
8	414524	SCREW
9	559065	SPREADER BAR
10	268190	SPREADER DRIVE PIN
11	415297	BUSHING
12	415389	ROCK SHAFT
13	415194	CRANK COMP
14	270 544204001	SCREW
15	281249	SPREADER DRIVING ROCK SHAFT SC
16	32825	OIL WICK
17	545424	NUT
18	415065	COLLAR COMP
19	504020	SCREW (300UX5)
20	268052	LOOPER TAKE UP ROD
21	545385	SCREW
22	269619	THREAD GUIDE
23	414510	SCREW

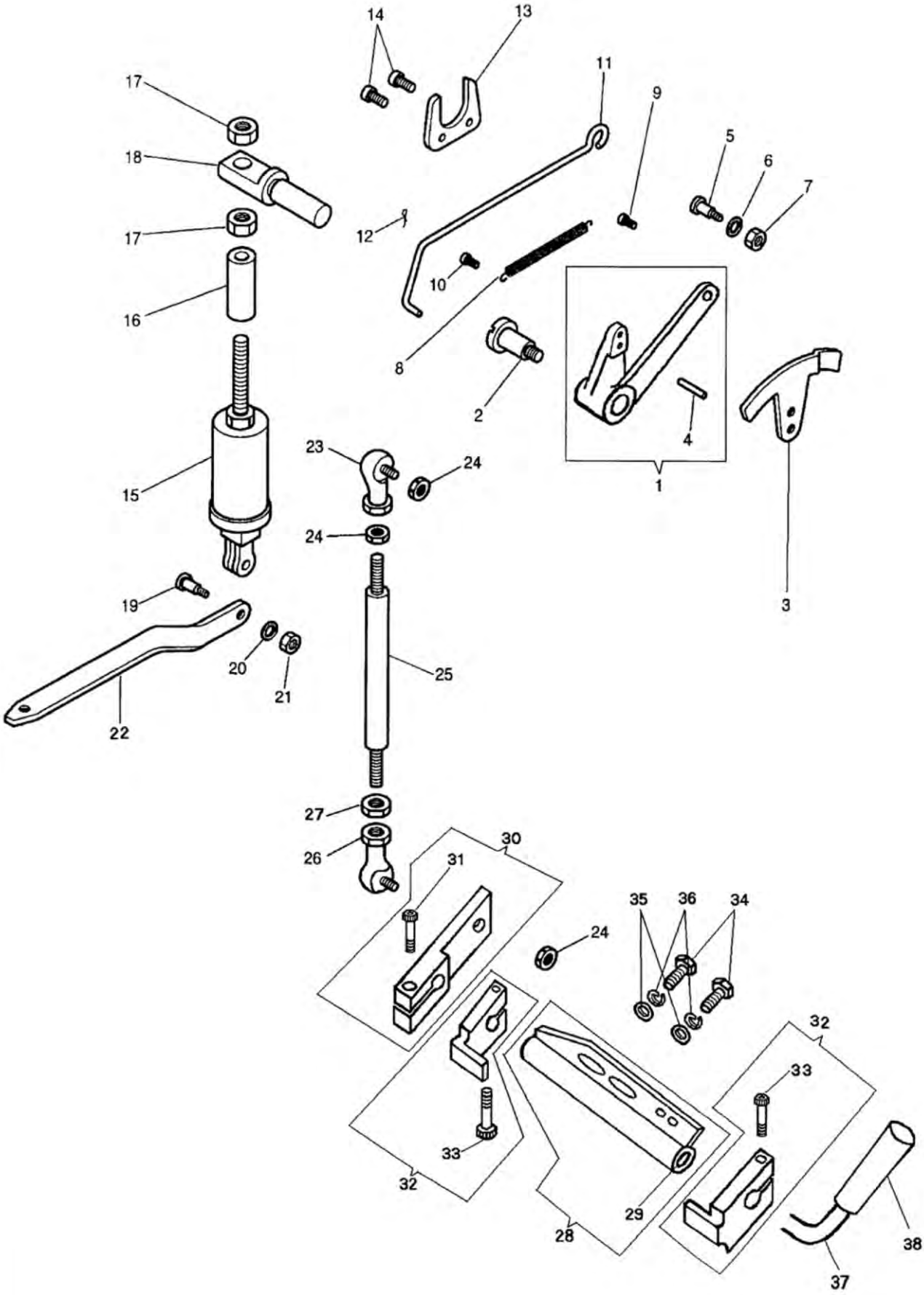
14
13
17
11
9
18
5
6
7
17
12
10
16
8
2
4
1
3
23
24
15
24
19
25
20
21
22
27
26
30
31
24
35
36
34
32
33
33
32
29
28
38
37

External Parts Sewing Arm #2

NO.	PART #	DESCRIPTION
1	KE0085	FOOT LIFTER LEVER
2	201363	SCREW 300W
3	267707	RELEASING PLATE
4	543850001	PLATE PIN
5	414577	HINGE SCREW
6	543804004	WASHER
7	541166003	NUT
8	204348	SWITCH SPRING
9	414570	SCREW
10	544336	STUD SCREW
11	267704	LIFTER LEVER ROD
12	248423	COTTER PIN
13	267650	RETAINER
14	545205451	SCREW, WHITE
15	415106	PRESSER BAR SPRING HOUSING ASS
16	559077	PRESSER BAR SPRING HOUSING COL
17	541198	NUT
18	267714	HOUSING SUPPORT
19	414567	HINGE SCREW
20	548154	SCREW WASHER
21	545405	NUT
22	267738	PR BAR SPR ARM
23	412373	CONNECTION (UPPER)
24	541166001	NUT
25	559068	LIFTING ROD
26	559067	LIFTING ROD CONNECTION (LOWER)
27	414774	NUT
28	KE0026	FOOT LIFT PIVOT COMPLETE
29	KE0030	BUSHING
30	KE0083	FOOT LIFT LEVER COMPLETE
31	414753004	BELT TENSION BRACKET SET SCREW
32	KE0084	STOP COLLAR COMPLETE
33	414750004	PRESSER BAR SPRING ARM FULCRUM
34	544499072	SCREW
35	270 543803005	WASHER
36	270 543805005	WASHER
37	KE0034	PIVOT ARM
38	KE0035	HANDLE

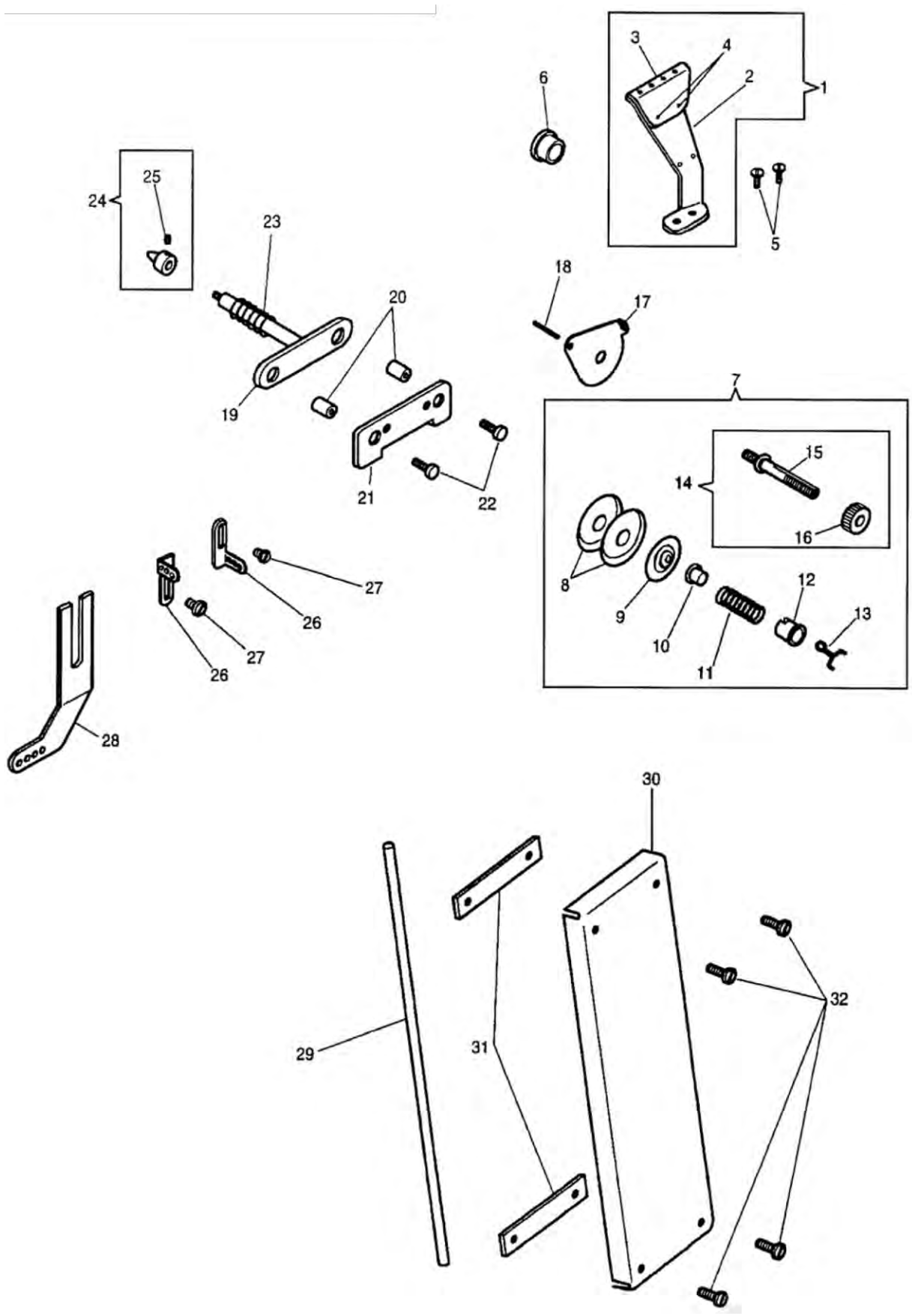
1
2
3
4
5
6
7
8
9
10
11
12
13
14
15
16
17
18
19
20
21
22
23
24
25
26
27
28
29
30
31
32

External Parts Sewing Arm #3

NO.	PART #	DESCRIPTION
1	268506	TH GUIDE BRACKET
2	268111	LOOPER BRACKET
3	268505	LOOPER TH GUIDE
4	50169	SCREW (5)
5	414537	SCREW
6	544875	PLUG
7	267971	THREAD TENSION
8	HA046072	TENSION DICS
9	32572	TENSION DISC (5)
10	59538	SPRING BUSHING
11	131741	TENSION SPRING
12	143657	BUSHING
13	143658	LOCKING SPRING
14	59539	TENSION SCREW STUD
15	59539	TENSION SCREW STUD
16	51570	NUT
17	54279	THREAD GUIDE
18	226206	LATCH SPRING PIN
19	415357	TENSION RELEASER
20	543853003	NEEDLE THREAD TENSION BRACKET
21	268167	TENSION BRACKET
22	544336	STUD SCREW
23	204365	SPRING
24	415252	RELEASER CAP
25	504048	SCREW
26	268513	N THREAD GUIDE
27	414514	SCREW
28	268312	THREAD GUIDE
29	268123	THREAD TUBE
30	415342451	LOOPER THREAD TUBE COVER
31	268500	GASKET
32	414639	GUIDE SCREW

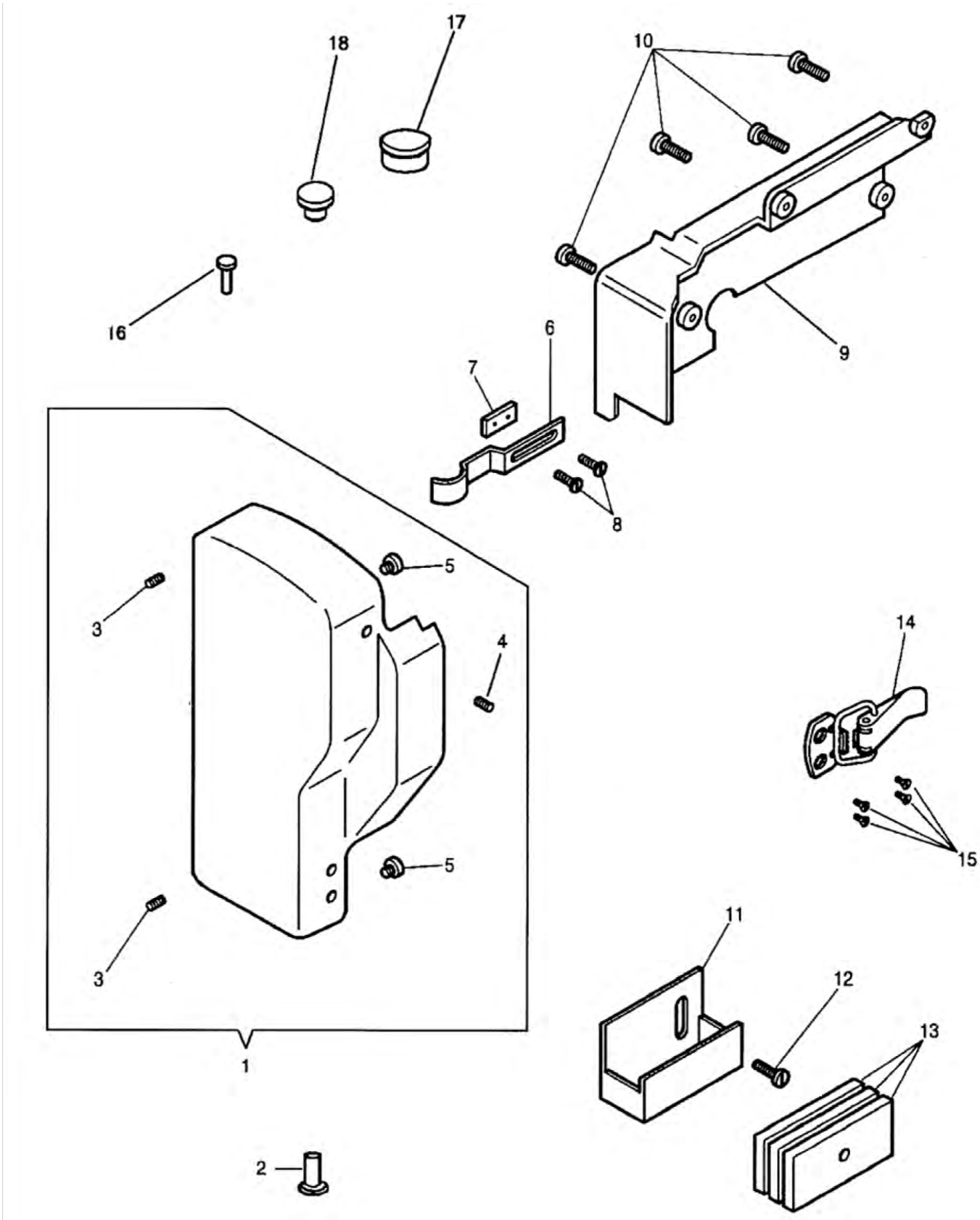
17
18
10
16
9
6
7
8
5
3
4
14
15
5
3
11
12
13
1
2

External Parts Sewing Arm #4

NO.	PART #	DESCRIPTION
1	KE0021	FACE PLATE (WITH 268033)
2	268330	FACE PLATE HINGE STUD
3	544053	SET SCREW
4	268033	LOCK STUD
5	228661	COVER CUSHION
6	268032	LOCK SPRING
7	415016	SPRING PLATE
8	414534	SCREW
9	KE0072	ARM SIDE COVER
10	545295	SCREW
11	267656452	THREAD LUBRICATOR
12	545385	SCREW
13	236957	OIL PAD,THREAD LUBRICATOR (FEL
14	559032	FACE PLATE LOCKER
15	374397002	FACE PLATE LOCKER SCREW
16	KE0007	FACE PLATE HINGE STUD
17	544875	PLUG
18	502986	PLUG

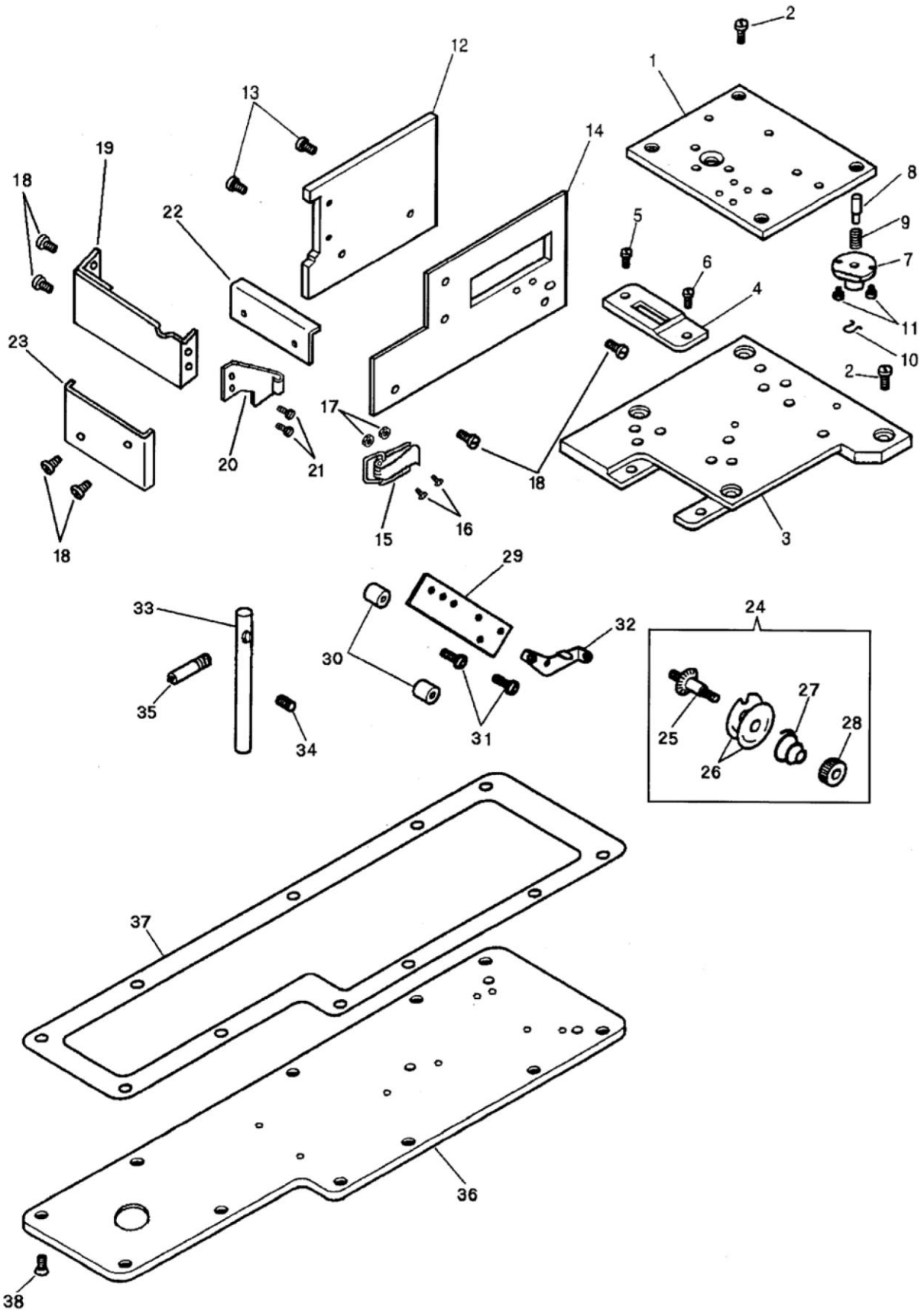
2
12
1
13
14
19
18
8
22
5
9
7
6
4
11
23
10
2
17
20
21
18
15
16
3
18
29
33
24
32
30
35
27
28
25
34
31
26
37
36
38

External Parts Sewing Arm #5

NO.	PART #	DESCRIPTION
1	KE0073	BED PLATE (RIGHT)
2	414508	SCREW
3	KE0037	BED PLATE (LEFT)
4	559060	THROAT PLATE
5	374107001	THROAT PLATE SCREW (BACK)
6	200100	SCREW
7	KE0075	FEED REGULATING STUD SOCKET
8	268081	STUD, FEED REG
9	270026	FEED REG STUD SPR
10	240245	RETAINING SPRING, (5PK)
11	545249452	FEED REGULATING STUD SOCKET SC
12	559075	BED COVER (BACK)
13	414520	SCREW
14	KE0068	BED COVER (FRONT)
15	KE0044	BED COVER (FRONT) LOCKER
16	270 544211051	STRIKER SCREW
17	541164001	NUT
18	544252	SET SCREW (300UX5)
19	KE0039	LOOPER COVER
20	KE0042	SNAP HOOK LATCH
21	544252	SET SCREW (300UX5)
22	559074	BED COVER (LEFT)
23	KE0043	END COVER
24	415294	TENSION COMP
25	415291	TENSION STUD
26	412203	TENSION DISC
27	10148	SPRING
28	541452	NUT
29	415255	TENSION BRACKET
30	543853003	NEEDLE THREAD TENSION BRACKET
31	414532	SCREW
32	268333	THREAD GUIDE
33	52239	LOOPER THREAD GUIDE
34	270 544211052	SCREW
35	559078	LOOPER THREAD GUIDE (PIPE)
36	KE0005	BOTTM PLATE
37	559034	BOTTOM PLATE GASKET
38	414533	SCREW

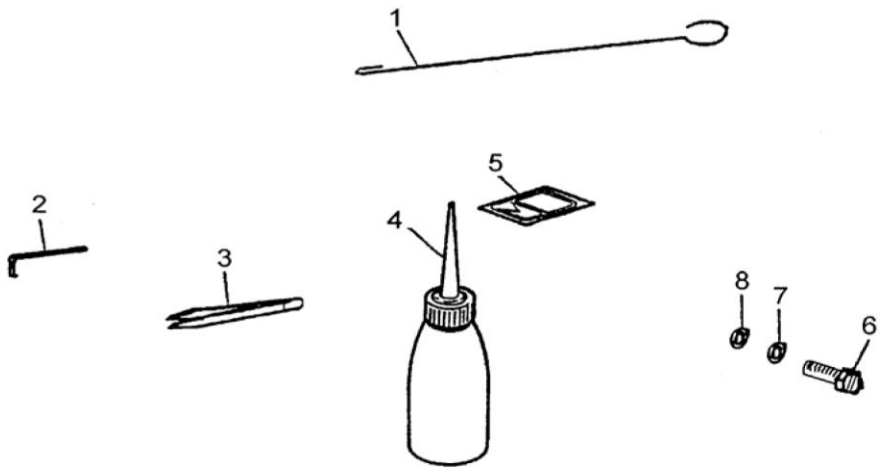

Accessories

NO.	PART NO.	DESCRIPTION
1	170 415377	THREADER WIRE
2	170 021887	WRENCH
3	270 BENTTWEEZER	BENT TWEEZERS, METAL
4	170 413448001	OILER
5	160 411201120	NEEDLE, 62X59
6	170 KE0015	BOLT
7	170 KE0016	WASHER
8	170 KE0017	SPRING WASHER

Installation of Footlift Link & Handle

Tools Required

(1) 7/16” wrench
(1) 7mm wrench
(1) 8mm wrench
(1) 9mm wrench
(1) 7/64” allen wrench
(1) 1/8” allen wrench

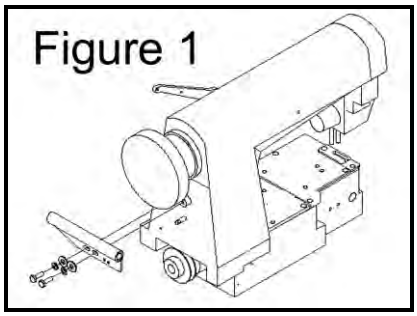

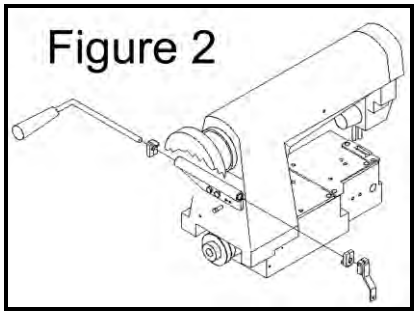

Installation

If not already installed, mount the pivot bracket (1345-503) to the sewing head as shown using the 1/4-20 bolts and washers provided. Center the slots on the bolts ensure the bracket is parallel to the sewing surface.

Place one stop collar (1345077) onto the pivot arm (1345-504) and insert the pivot arm into the barrel of the pivot bracket as shown. Place another stop collar onto pivot arm as shown.

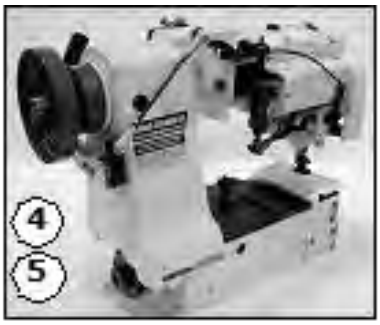

Place the collar/link (1349518) on the pivot arm aligning the two set screws in the collar with the two flat surfaces on the pivot arm shaft. Tighten the two set screws.

Push the pivot arm until the collar/link is touching the bearing surface on the pivot bracket. Then, snug the stop collar, on the other side, against the other bearing surface on the pivot bracket. Be sure the stop does not prevent the handle from turning upwards approximately 90 degrees on the handle side.

Place one of the two threaded studs of the linkage (included in accessory box) into the hole at the end of the collar/link. Put the other threaded stud into the hole located in the footlift lever. Place and tighten the two hex nuts.

Adjustments

The following adjustments should be made to achieve maximum footlift while the handle is able to stay in the up position without being held.

Lengthen the linkage by turning the rod until the handle is just able the stay in the up position. Tighten the lock nuts on each end of the rod.

Turn the right stop collar until the stop hits the pivot bracket in order to prevent the handle from turning more than is necessary for it to stay in the up position.

Adjust the left stop collar so that the handle stops in the down position.

ASSEMBLY / ADJUSTMENT INSTRUCTIONS

1. Position the column assy (item 6) with the lower edge below the bottom of the slide support bracket (item 15). **DO NOT ADJUST WITHT THE COLUMN OR TABLE IN THE "UP" POSITION.**
2. Loosen the (8) screws (item A) holding the slide support bracket and the jam nuts (item B) for the top and bottom adjustment screws.
3. Tighten or loosen the (2) upper and (2) lower adjustment screws (item C) as required to put pressure on the column assembly and align it in the support column. **NOTE: EXCESSIVE PRESSURE WILL CAUSE BINDING AND PREMATURE FAILURE OR WEARING OF PARTS.** Apply only the minimun ammount of pressure required to reduce the rotational movement of the table to an acceptable
4. Tighten the (4) top and (4) bottom support screws (item A)

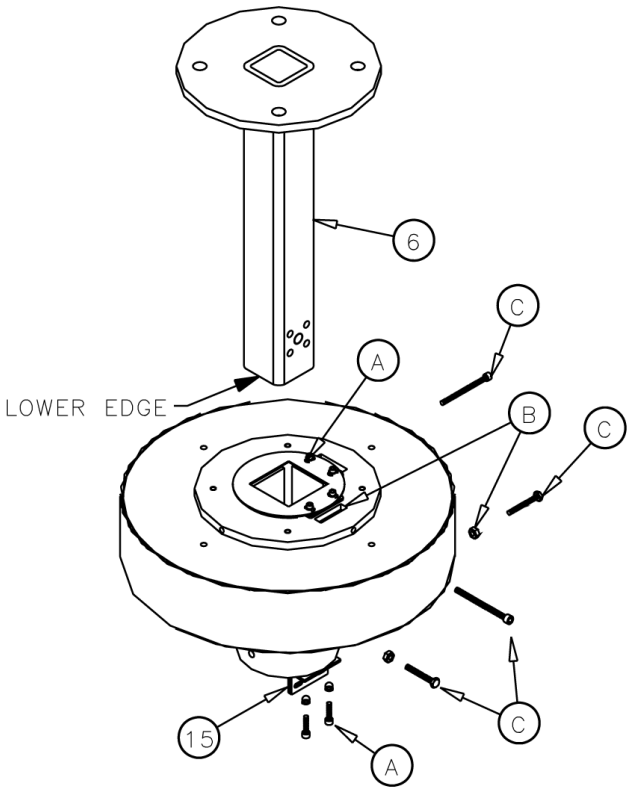

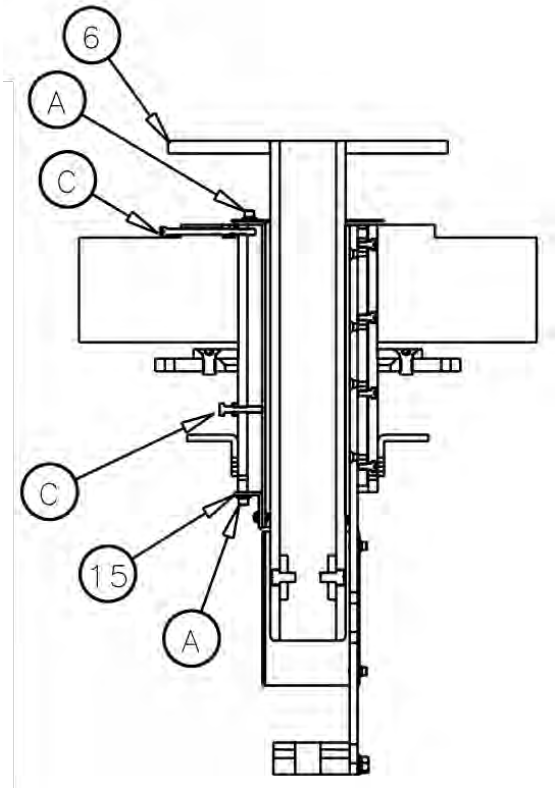

Assembly Drawings & Parts Lists

The materials contained herein are confidential and proprietary information of Atlanta Attachment Company. In addition to any confidentiality and non-disclosure obligations that currently exist between you and Atlanta Attachment Company, your use of these materials serves as an acknowledgment of the confidential and proprietary nature of these materials and your duty not to make any unauthorized use or disclosure of these materials.

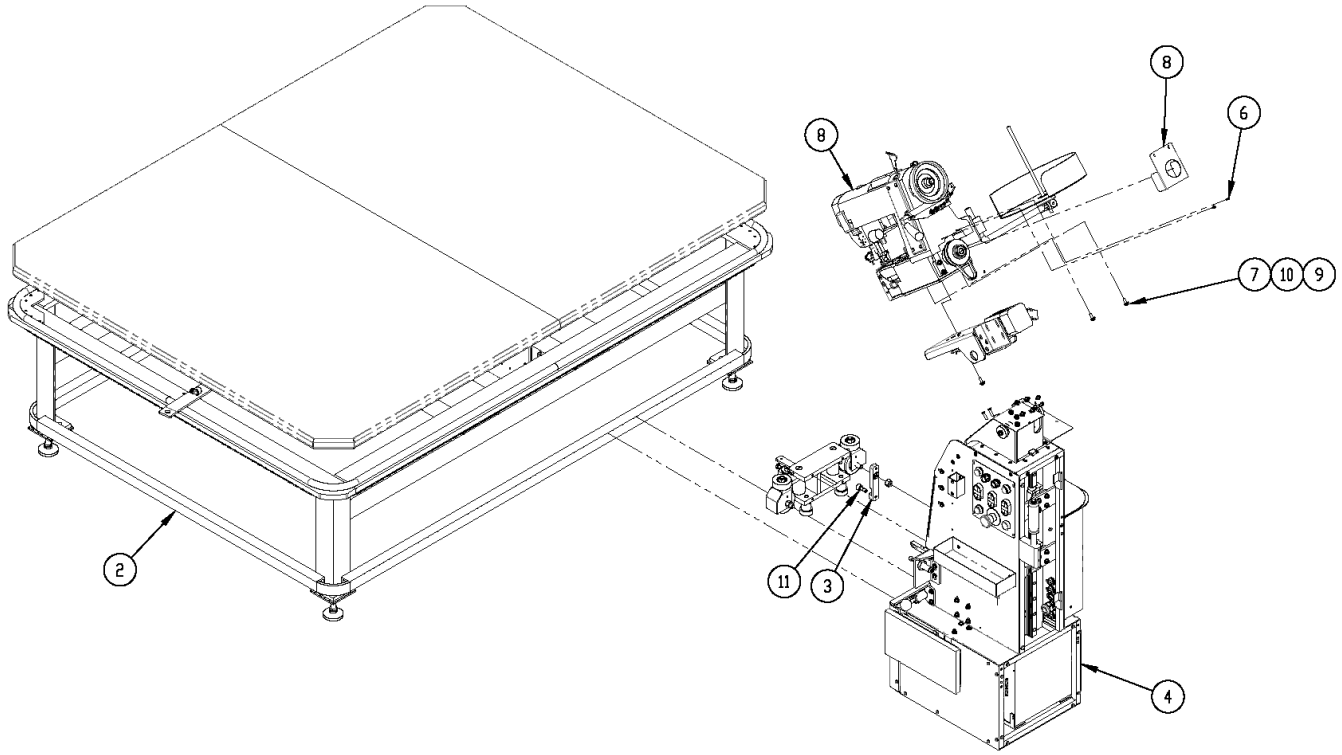

11345-6A Tape Edge Machine

AAC Drawing Number 9001651 Rev 2

NO.	QTY	PART#	DESCRIPTION
1	*1	1345-6WD1	DIAGRAM, WIRING
2	1	13452500A	TABLE ASSY, COMPLETE
3	1	13453428	MOUNT, CAM FOLLOWER
4	1	134563000A	CARRIAGE ASSEMBLY
5	*1	1345LAB2	LABEL,TABLE,DON'T SIT/STAND
6	2	SSBC80032	6-32 X 1/2 BUT HEAD
7	3	SSHC01048GR8	1/4-20 X 3/4 HEX CAP
8	1	SSIN-300UX6M	HEAD,MOD,GEN,TAPE EDGE
9	3	WWFS1/4	WASHER,FLAT,SAE,1/4
10	3	WWL1/4	WASHER,LOCK,1/4
11	1	MMCCF3/4SB	CAM FOLLOWER,3/4 DIA

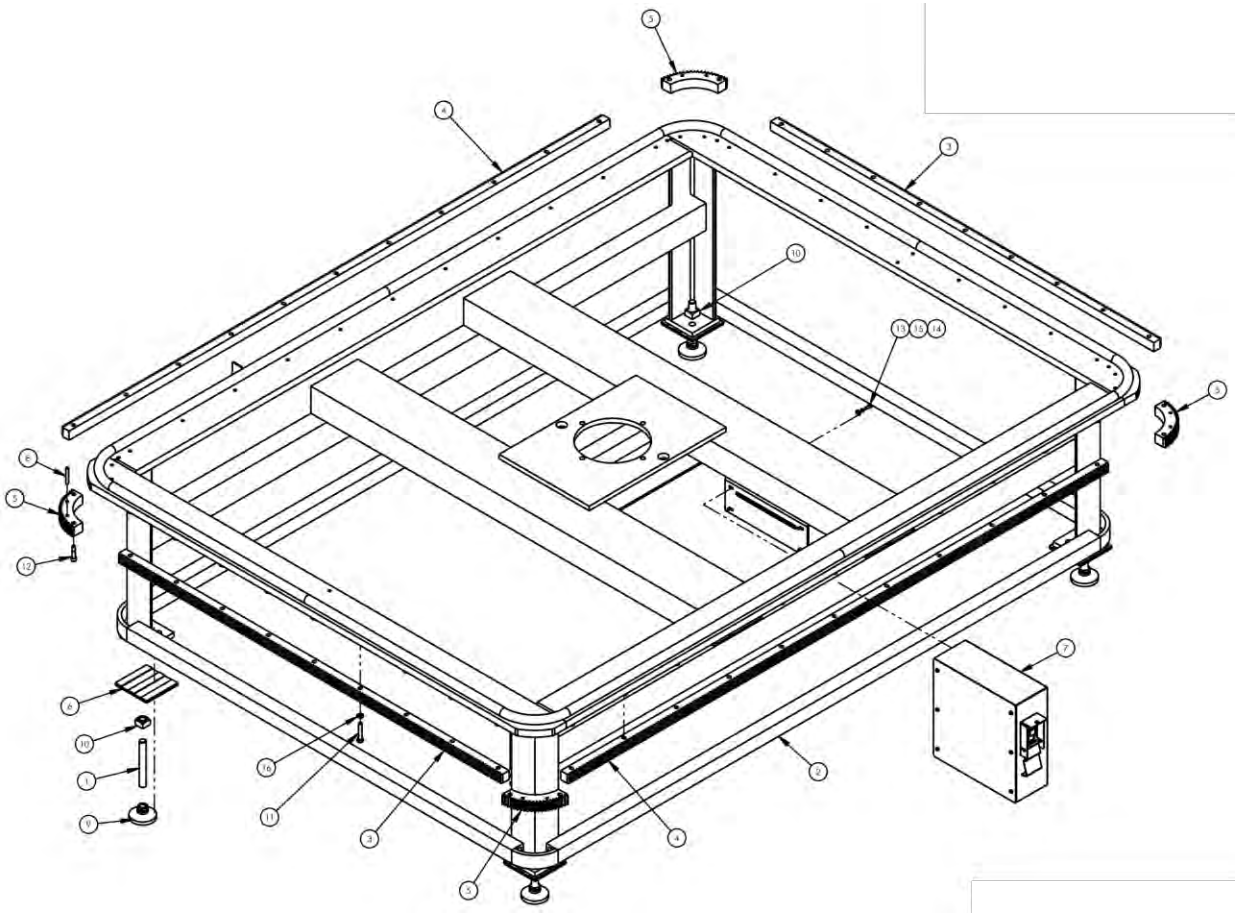

13451000 Table Base Assembly

AAC Drawing Number 9001365 Rev 7

NO.	QTY	PART #	DESCRIPTION
1	4	0411-1063	ROD, THREADED, 5/8-11 X 5
2	1	1345027	FRAME, WELDMENT TAPE EDGE
3	2	13451019	GEAR RACK, SHORT
4	2	13451020	GEAR RACK, LONG
5	4	13451021	GEAR RACK, CORNER
6	4	13451029	PAD, RUBBER
7	1	13459500	CONTROL BOX
8	8	IIS016X112	ROLL PIN 1/8 DIA X 1 1/2 SS
9	4	MML-2	LEVELING PAD, 5/8-11
10	8	NNSH5/8-11	NUT, SQUARE, 5/8-11
11	40	SSHC10112	SCREW,HEX,5/16-18X1-3/4
12	8	SSSC10080	5/16-18 X 1-1/4 SOC CAP
13	4	SSSC98032	10-32X1/2, SOC CAP
14	4	WWFS10	WASHER, FLAT, #10, SAE
15	4	WWL10	WASHER,LOCK,#10,S/S
16	40	WWL5/16	WASHER, LOCK, 5/16

Page 59

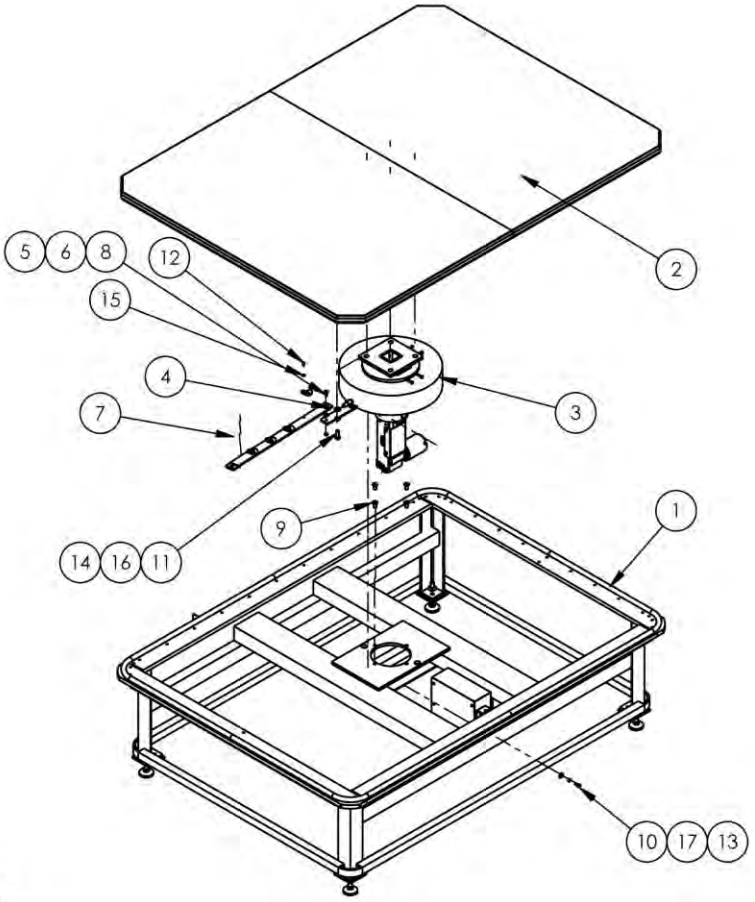

13452500A Table Assembly

AAC Drawing Number 9001366 Rev 11

NO.	QTY	PART #	DESCRIPTION	
1	1	13451000	BASE ASSY LIFT TABLE TAPE	Page 53
2	1	13451200	TABLE TOP ASSY,QUEEN	
3	1	13452000D	COLUMN, LIFT ASSY	Page 57
4	1	13452027	LINK, CABLE ASSY,TWIN	
5	2	BBTRA613	WASHER,THRUST,STL, .375B	
6	1	NNJ5/16-18	NUT,JAM,5/16-18	
7	4	PPP2217	WIRE CLAMP, .337I.D.	
8	1	SSFC10056S	10-32 x 2 FLAT ALLEN	
9	4	SSFC45064	1/2-13 X 1 SOC FLAT CAP	
10	2	SSHC10048	5/16-18 X 3/4 HHCS	
11	4	SSHC45080	1/2-13X1-1/4 HEX CAP	
12	4	SSSC98032	10-32X1/2, SOC CAP	
13	2	WWF5/16	WASHER,FLAT,5/16	
14	4	WWFS1/2	WASHER,FLAT,SAE,1/2	
15	4	WWFS10	WASHER, FLAT, #10, SAE	
16	4	WWL1/2	1/2 LOCK WASHER	
17	2	WWL5/16	WASHER, LOCK, 5/16	

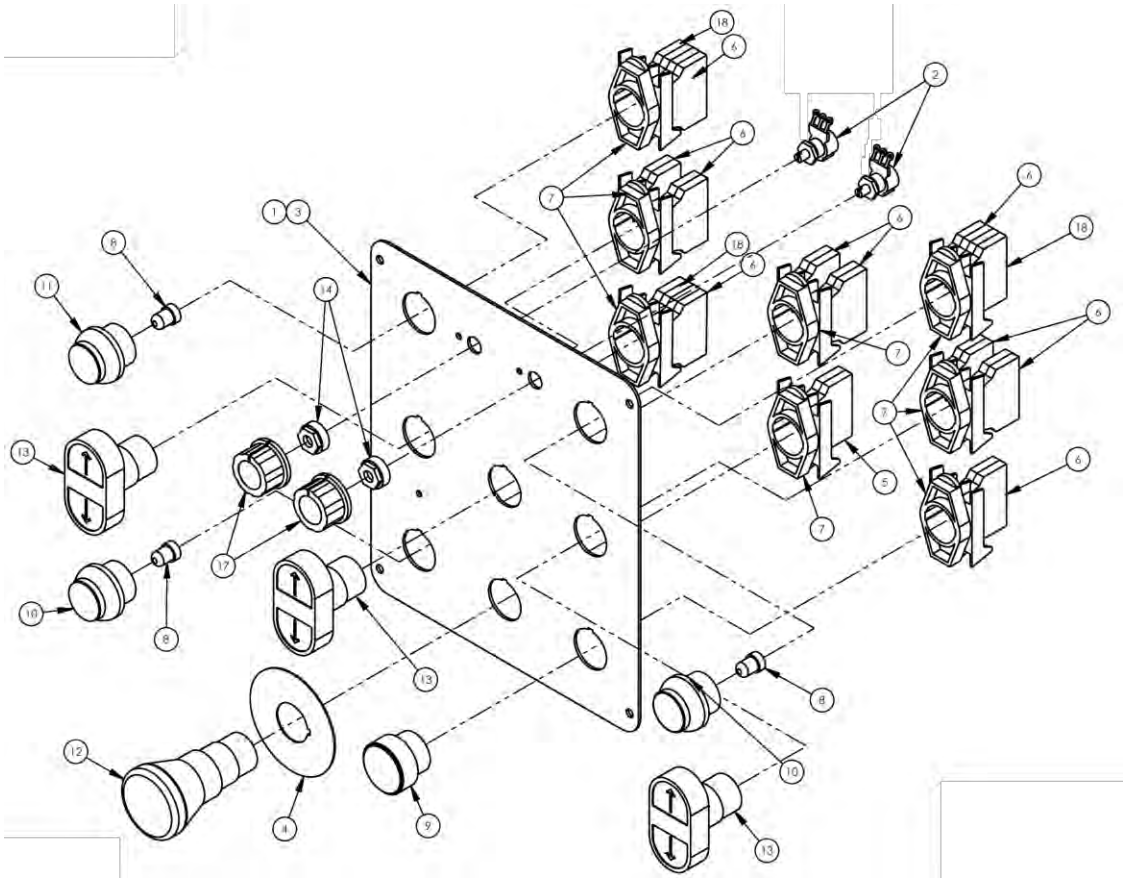

134549300A Control Button Panel

AAC Drawing Number 9001503 Rev 3

NO.	QTY	PART #	DESCRIPTION
1	AR	13454LAB	LABEL, SWITCH PANEL
2	2	13459008A	CABLE, POT, IK, 4 FT.
3	1	13459301D	PANEL,CONTORL BUTTON,2 PO
4	1	EE15Y	PLATE, LEGEND, YELLOW
5	1	EE3X01	BLOCK,P.B. CONTACT, N.C.
6	10	EE3X10	BLOCK,P.B. CONTACT, N.O.
7	8	EEA3L	LATCH,PUSH BUTTON
8	3	EED5N157	LAMP, INCONDECENT, BAYONET
9	1	EEPFA6	BUTTON, PUSH, BLU, FLUSH
10	2	EEPLE3	BUTTON, PUSH, GRN, ILLUM
11	1	EEPLE4	BUTTON, PUSH, RED, ILLUM
12	1	EEPMTS44	E-STOP BUTTON, TWIST REL.
13	3	EEPU2A3	BUTTON, PUSH 22MM, 2X,G MOM FLUSH
14	2	EESL110B	SHAFT LOCK,NYLON,1/4"
15	6 FT	FF18988C	CABLE, 8 COND, 18GA
16	24 FT	FF19511	CABLE, 3 COND, 14GA
17	2	FF274-416	KNOB,SPEED CONTROL
18	3	EED53D0	BLOCK, LAMP, 22MM P.B.

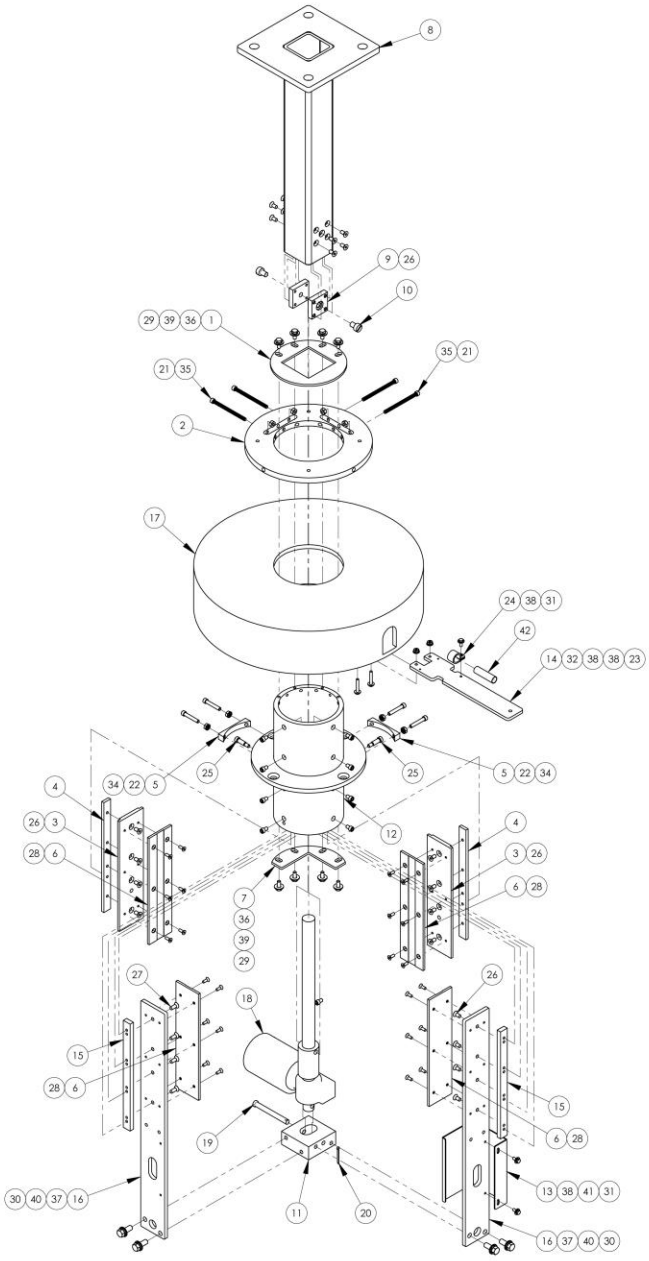
8
9 26
10
29 39 36 1
35 21
21 35
2
17
24 38 31
42
14 32 38 38 23
25
25
5 22 34
4
34 22 5
26 3
28 6
12
4
3 26
6 28
7
36
39
29
27
18
26
15
28 6
15
6 28
19
13 38 41 31
30 40 37 16
11
20
16 37 40 30

13452000D Column Lift Assembly

AAC Drawing Number 9002809 Rev 4

ITEM NO.	QTY.	PART NUMBER	DESCRIPTION
1	1	1345093	BKT,EDGE GUIDE
2	1	1345130	TOP MOD.,SLIP RING
3	2	1345131	PLATE,SLIDE, ADJ
4	2	1345132	BAR, BRACE,.25 THK
5	2	1345134	SPACER,COLUMN CONCAVE
6	4	1345135	PLATE, SLIDE
7	1	1345136	BKT,LOWER GIB STOP
8	1	1345231	COLUMN ASSY
9	2	1345234	PLATE,ACTUATOR MNTNG,UPR
10	2	13452004A	PIN, COLUMN
11	1	13452006B	PLATE, ACTUATOR
12	1	13452020B	COLUMN, HUB ASSY.
13	1	13452023A	COVER, ACTUATOR
14	1	13452024	GUIDE ASSY,CABLE, SLIP RING 11345
15	2	13452040	BAR, BRACE
16	2	13452044A	PLATE,SLIDE SUPPORT
17	1	EERHU-B08	SLIP RING ASSY,15A,8 COND
18	1	MM85200-12.5	ACTUATOR,ELEC,220V,12.5"
19	1	MM98306A289	PIN,CLEVIS,3/8X3-1/2
20	1	MM98338A445	COTTER PIN, 1/8 X 2 1/2
21	4	NNH1/4-20	NUT,HEX,1/4-20
22	4	NNK1/4-20	NUT,KEP,1/4-20
23	2	NNK10-32	KEP NUT, 10-32
24	1	PPP2217	WIRE CLAMP, .337I.D.
25	2	SSAS020048	SCREW,ALLEN SHOULDER
26	20	SSFC01032	1/4-20 X 1/2 FLAT ALN CAP
27	4	SSFC01040	1/4-20 X 5/8 FLAT ALN CAP
28	24	SSFC98032	10-32 X 1/2 FLAT ALLEN CAP
29	8	SSHC01040	1/4-20 X 5/8 HHCS
30	4	SSHC25064	3/8-16 X 1 HHCS
31	3	SSHC98032	10-32X1/2 HEX HD
32	2	SSHC98080	#10-32 X 1-1/4 HEX CAP
33	9	SSSC01024	1/4-20 X 3/8 SOC CAP SC
34	4	SSSC01096F	1/4-20 X 1-1/2 SOC CAP
35	4	SSSC01224T	SCR,HEX CAP 1/4-20X3-1/2
36	8	WWF1/4	WASHER, FLAT, 1/4", COM
37	4	WWFS3/8	WASHER,FLAT,SAE,3/8
38	7	WWFS10	WASHER, FLAT, #10, SAE
39	8	WWL1/4	WASHER,LOCK,1/4
40	4	WWL3/8	WASHER,LOCK, 3/8
41	2	WWL10	WASHER,LOCK,#10
42	1	ZTH1/2B	HEAT SHRINK TUBE,1/2"DIA

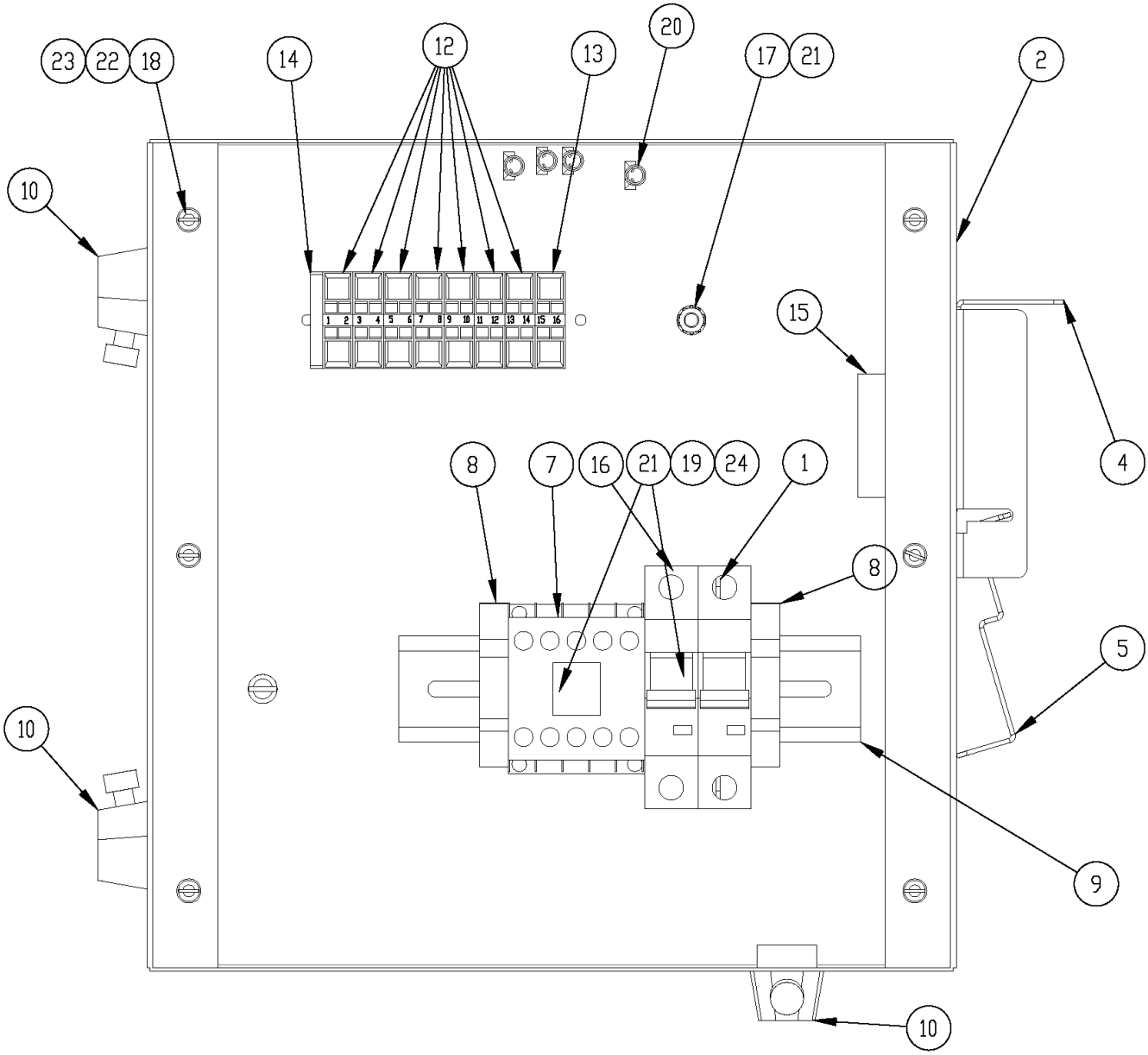
23
22
18
14
12
13
20
17
21
2
10
15
4
8
7
16
21
19
24
1
8
5
10
9
10

13459500 Control Box

AAC Drawing Number 9001947 Rev 1

NO.	QTY	PART#	DESCRIPTION
1	1	13459004A	MOUNTING BRACKET, CAPACIT
2	1	13459501	PANEL,HIGH VOLTAGE
3	1	13459503	COVER, ELECTRICAL PANEL
4	1	40-322	BOTTOM, AC POWER LOCKOUT
5	1	40-323	TOP, AC POWER LOCKOUT
6	2	EEAK42BS	RIVET,BLIND 1/8 DIA ALUM.
7	1	EECA491024	CONTACTOR, MINI, 240V
8	2	EECLIPFIX	ANCHOR,DIN RAIL
9	1	EETS35X7.5A	DIN RAIL-AMERICAN
10	4	FF1724	STRAIN RELIEF
11	15	FF19511	CABLE, 3 COND, 14GA
12	7	FF264-341	TERMBLK,WAGO,TOP,DUAL,GRY
13	1	FF264-347	TERMBLK,WAGO,TOP,DUAL,GRN
14	1	FF264-371	TERMBLK,WAGO,TOP,END
15	1	FF3120L420A	CIRCUIT BREAKER, THERMAL
16	1	FFL722C	BREAKER, CIRCT. THERM-MAG
17	1	NNK8-32	NUT,KEP,8-32
18	6	SSPS80016	#6-32 X 1/4 LG PAN HD
19	4	SSPS98024	10-32X3/8 PAN HD SLOT
20	4	TTBB5263	TERMINAL,.25 FULLY INSUL
21	5	WWF8	WASHER, FLAT, #8
22	6	WWFS6	WASHER, FLAT, #6
23	6	WWL6	WASHER,LOCK,#6
24	4	WWL8	WASHER,LOCK,#8

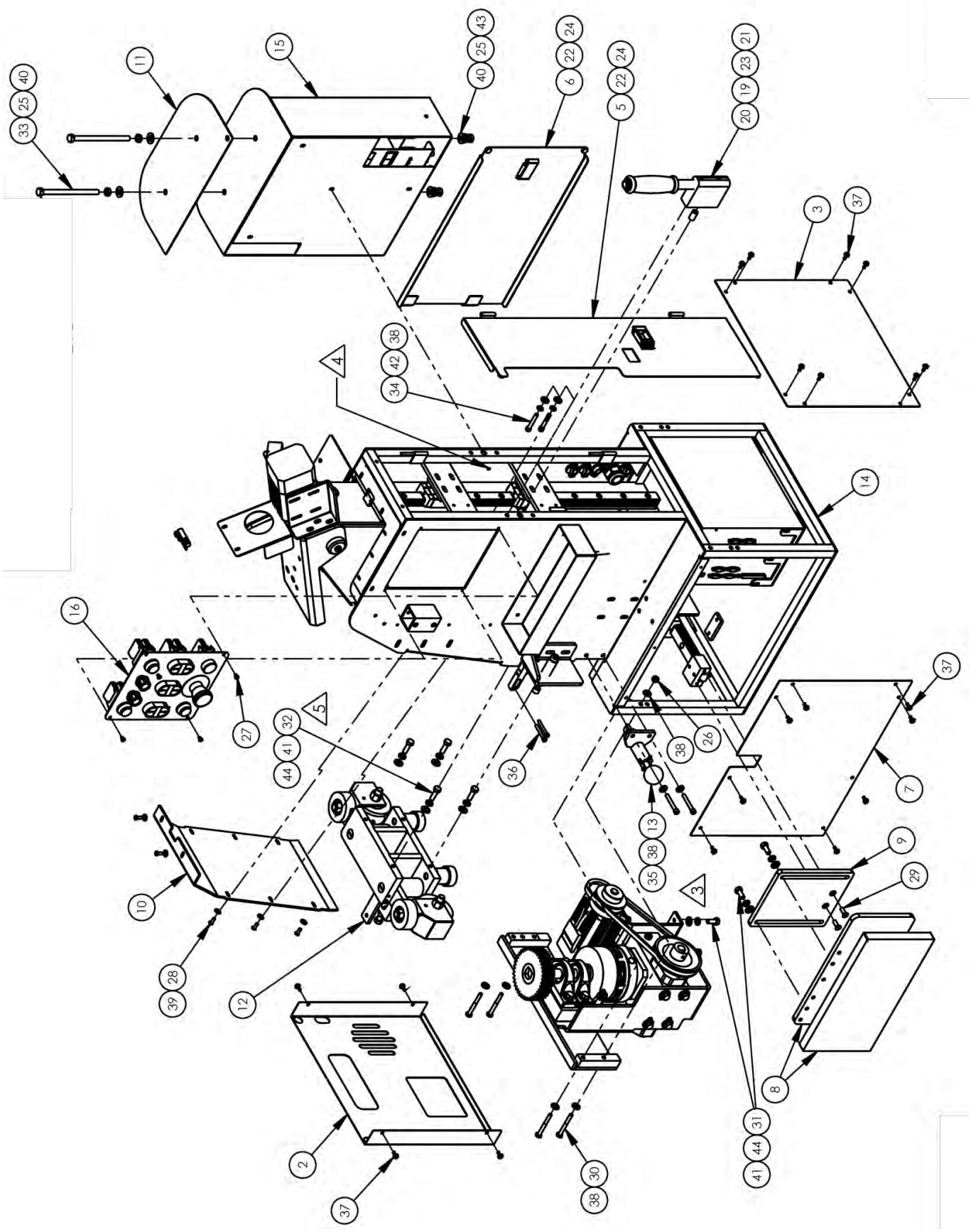
11
15
40
25
33
43
25
40
24
22
6
24
22
5
21
23
19
20
3
37
38
42
34
4
14
16
27
32
41
44
5
36
38
26
37
7
13
38
35
9
29
3
10
28
39
12
2
37
30
38
8
31
44
41

134563000A Carriage Assembly

AAC Drawing Number 9001652 Rev 3

NO.	QTY	PART#	DESCRIPTION	NO.	QTY	PART#	DESCRIPTION
1	*AR	1345-6WD1	DIAGRAM, WIRING	26	1	MMSH-98	RING,SNAP,EXTERNAL
2	1	1345051	COVER,CARRIAGE,FRONT	27	4	MMSLD-ECH	1/2" DIA RUBBER
3	1	13453003A	COVER,CARRIAGE, RIGHT	28	4	NNH3/8-16	NUT,HEX,3/8-16
4	1	13453037	SPACER, 7/16 OD X 9/32	29	1	NNH5/8-18	NUT,HEX,5/8-18
5	1	13453060C	DOOR, CARRIAGE, RH	30	4	NNK1/4-20	NUT,HEX,KEP,1/4-20
6	1	13453061A	DOOR CARRIAGE, REAR	31	4	SSBC90016	8-32 X 1/4 BUTTON
7	1	13453062A	COVER,CARRIAGE LH	32	8	SSBC98032	10-32 X 1/2 BUTTON
8	1	13453303	KNEE PAD ASSY.	33	2	SSFC01048	1/4-20 X 3/4 FLAT CAP
9	1	13453304	BRKT ,MNT, KNEE PAD	34	4	SSHC01144	HEX HEAD BOLTS
10	1	13453330	PANEL, CARRIAGE, LH	35	4	SSHC10048	5/16-18 X 3/4 HHCS
11	1	13453383	PAD,THREAD, 2 POS	36	4	SSHC10064	5/16-18 X 1 HHCS
12	1	13453400A	CARRAGE GUIDE ASSY.	37	2	SSHC25352	3/8-16X5-1/2,HEX CAP
13	1	13453420A	BEARING STUD,INNER	38	2	SSSC01096	1/4-20 X 1-1/2 SOC
14	1	13453800	GEAR LOCK ASSY.	39	2	SSSC01112	1/4-20 X 1-3/4 SOC
15	1	33005110A	HANDLE 9.25 L	40	2	SSSC98096	10-32 X 1-1/2 SOC CAP
16	1	33005116B	SPACER, HANDLE	41	20	SSZS93032	SCREW, SHT.METAL 10
17	1	134543300A	TOP CARRIAGE ASSY	42	1	WWF5/8	WASHER,FLAT,5/8
18	1	134549000B	CONTROL BOX ASSY	43	12	WWFS1/4	WASHER,FLAT,SAE,1/4
19	1	134549300A	CONTROL, BUTTON	44	4	WWFS3/8	WASHER,FLAT,SAE,3/8
20	1	134553500E	GEAR BOX ASSEMBLY	45	8	WWFS5/16	WASHER,FLAT,SAE,5/16
21	*1	134569400	CABLE PACKAGE	46	8	WWFS10	WASHER, FLAT, #10
22	1	BB305705C	BEARING,CAM ROLLER	47	2	WWL1/4	WASHER,LOCK,1/4
23	1	EE49111AS	PUSH BUTTON SWITCH	48	2	WWL3/8	WASHER, LOCK, 3/8
24	2	MM40450010	FASTENER,SLIDE LOCK	49	8	WWL5/16	WASHER, LOCK, 5/16
25	1	MMGP-105	GRIP HANDLE-FOAM 3/4				

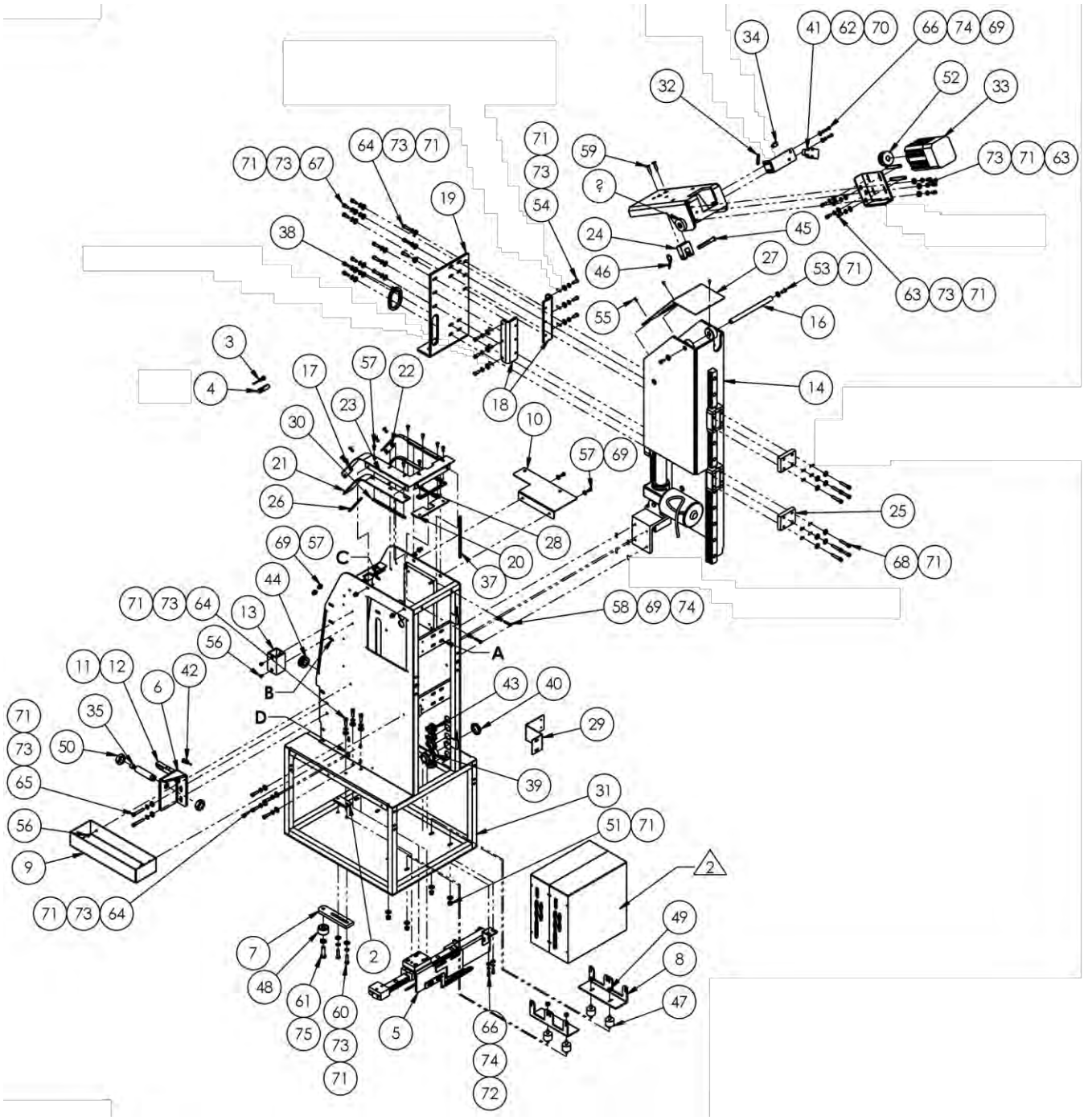
34
41 62 70
66 74 69
32
52
33
71 73 67
64 73 71
71
73
54
59
?
73 71 63
19
38
24
45
46
27
53 71
63 73 71
55
16
3
4
17
57
22
23
18
10
14
30
21
26
57 69
25
28
69 57
C
20
37
68 71
44
71 73 64
13
58 69 74
56
A
11 12
6
42
B
43
40
71
35
D
29
73
50
65
39
31
56
51 71
9
2
71 73 64
49
7
2
8
48
61
60
47
75
73
5
66
74
71
72

134543300A Top Carriage Assembly

AAC Drawing Number 9001526 Rev 12

NO.	QTY	PART #	DESCRIPTION	NO.	QTY	PART #	DESCRIPTION
1	2	0211-209	PLATE,NUT,10-32@2.25 CTC	39	1	FF3234	STRAIN RELIEF,LIQ TIGHT
2	2	029-003A	PLATE, NUT, 1/4-20 @ 1.50	40	1	FF8465	NUT,LOCK,3/4NPT,NYLON,BLK
3	1	1278-7055D	PROX SWITCH W/PLUG,12"	41	1	FFSM312LV	BANNER MINI-BEAM w/OUT PL
4	1	1345-505	BLOCK, FOOT UP SENSOR	42	1	FFUZP101	PROX. SWITCH
5	1	1345100	KNEE SWITCH ASSEMBLY	43	4	K-235	CONNECTOR,ROMEX,1/2"
6	1	13453301	MOUNT, SHOCK ABSORBER	44	1	MM9307K69	GROMMET,5/8,1.125,.125GV
7	1	13453313	MOUNT, CARRIAGE GUIDE, LO	45	2	MM98330A245	CLEVIS PIN 2.25LG STL
8	2	13453324	BRKT, CONTROL BOX MOUNT	46	2	MM98335A064	SPRING CLIP
9	1	13453341	TOOL TRAY, 2 X 3.38 X 11	47	4	MMB6002	MOUNT,VIBRATION,MOTOR
10	1	13453354	BRKT, THREAD GUIDE	48	1	MMCYR114S	FOLLOWER, CAM
11	1	13453379	HOLDER, PROX SWITCH, BTM	49	4	NNH1/4-20	NUT,HEX,1/4-20
12	1	13453380	HOLDER, PROX. SWITCH	50	2	NNJ3_4-16	3/4-10 JAM NUT
13	1	13453385	HOLDER, SCISSOR	51	8	NNK1/4-20	NUT,HEX,KEP,1/4-20,W/LOCK
14	1	13453600	COLUMN ASSY.	52	1	PP10LF050M3	PULLEY, GEAR, 3/8P, 10T,
15	1	13453602	PLATE, SEWING HEAD MOUNT	53	2	SSBC01032	1/4-20 X 1/2 BUT CAP SC
16	1	13453603A	SHAFT 60C 1/2 X 6.91L	54	6	SSBC01040	1/4-20 X 3/4 BUT CAP SC
17	1	13453606	BRKT, BRUSH MOUNT, FRONT	55	3	SSBC80024	6-32 X 3/16 BUT HEAD
18	2	13453611	MOUNT, BEARING BLOCK BRKT	56	4	SSBC98016	10-32 X 1/4 BUTTON CAP SC
19	1	13453623	BRKT, BEARING BLOCK MOUNT	57	22	SSBC98032	10-32 X 1/2 BUTTON CAP SC
20	2	13453637	BRUSH, COLUMN, LH	58	2	SSBC98064	10-32 X 1.0 BUTTON CAP SC
21	1	13453638	BRUSH, COLUMN, FRONT	59	2	SSFC01064	1/4-20 X 1 FLAT CAP
22	1	13453639	BRKT, BRUSH MOUNT, REAR	60	2	SSHC01064	1/4-20 X 1 HHCS
23	1	13453640	BRUSH, COLUMN, REAR	61	1	SSHC25080	3/8-16 X 1-1/4 HEX CAP
24	1	13453642	CLEVIS, ACTUATOR, 2" STRO	62	2	SSPS70048	4-40 X 3/4 PAN HD SLOTTED
25	2	13453645	SPACER, RAIL	63	7	SSSC01032	1/4-20X1/2 SOC CAP
26	2	13453647	PLATE, NUT	64	13	SSSC01048	1/4-20 X 3/4" SOC CAP SC
27	1	13453648	COVER,COLUMN	65	2	SSSC01096	1/4-20 X 1-1/2 SOC CAP
28	2	13453649	PLATE, NUT	66	4	SSSC98032	10-32X1/2, SOC CAP
29	1	13453650	BRKT, WIRE LOOM	67	8	SSSCM6X15	M6X15 SOC CAP SCREW
30	2	13453652	PLATE,NUT,6-32,3PL@2.5 OC	68	8	SSSCM6X35	M6X30 SOC CAP SCREW
31	1	134543100	CARRIAGE FRAME ASSY	69	12	WWF10	WASHER, FLAT, #10, COM
32	1	1975-412A	PLATE,NUT,4-40,.95CTC	70	2	WWF4	WASHER, FLAT, #4
33	1	4059-DC1500ABA1	MOTOR,W/DC CONTROLLER	71	56	WWFS1/4	WASHER,FLAT,SAE,1/4
34	1	AAF3/8	CLAMP, BLACK PLASTIC	72	2	WWFS10	WASHER, FLAT, #10, SAE
35	1	AAOEM.5BSAL	SHOCK, 3/4-18 X 3.5	73	38	WWL1/4	WASHER,LOCK,1/4
36	1	AATPWL3_4	LOOM, WIRE, 3/4"	74	6	WWL10	WASHER,LOCK,#10,S/S
37	1.4	FF2226	EDGING,GROMMET	75	1	WWL3/8	WASHER, LOCK, 3/8
38	1.4	FF2230	EDGING,GROMMET,.25"	76	1	13453655	SPACER, COLUMN REAR

Page 65

Page 75

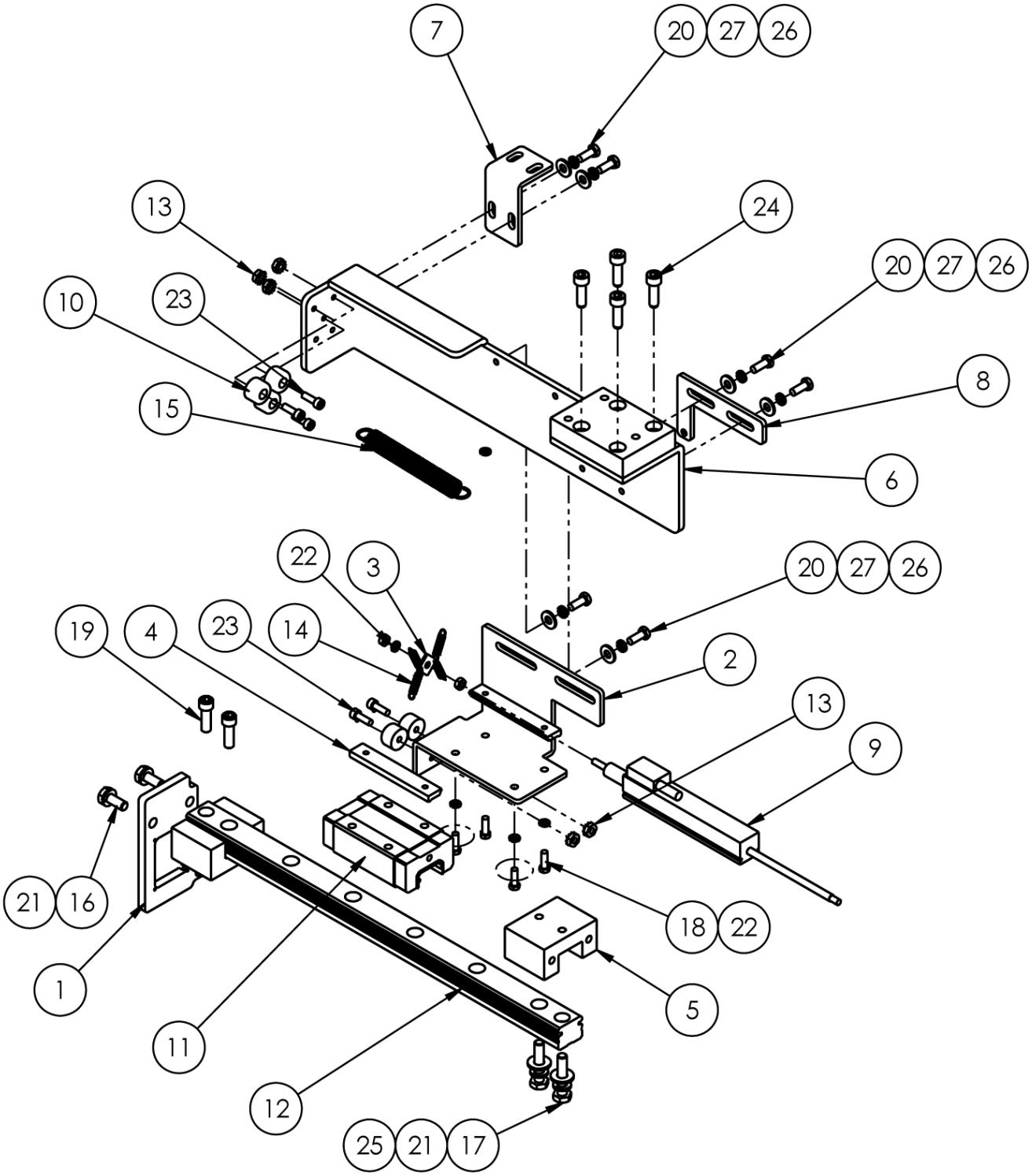
7
20
27
26
13
24
20
27
26
10
23
8
15
6
22
3
20
27
26
19
4
23
14
2
13
9
21
16
18
22
1
5
11
12
25
21
17

1345100 Knee Switch Assembly

AAC Drawing Number 1345100 Rev 5

NO.	QTY	PART #	DESCRIPTION
1	1	1345101	PLATE,TRANSDUCER END
2	1	1345102	MOUNT, TRANSDUCER
3	1	1345103	PLATE,SPRING,TRANSDUCER
4	2	1345104	CLAMP,TRANSDUCER
5	2	13453306	BLOCK,RAIL STOP
6	1	13453309	RAIL BKT ASBLY
7	1	13453337	BRACKET,RAIL SUPPORT
8	1	13453361	BRKT, SPRING TENSION
9	1	FF002304A	LINEAR TRANSDUCER ASBY
10	5	MM9540K53	BUMPER, 3/4 DIA
11	1	MMAGH25CAN	LINEAR BEARING
12	1	MMAGR25360M1	RAIL,LINEAR,MODIFIED
13	5	NNK8-32	KEP NUT, 8-32
14	4	RRLE018B1	SPRING,EXT .020X.19X1.5
15	1	RRLE055E10	SPRING,EXT .020X.19X1.5
16	2	SSHC01040	1/4-20 X 5/8 HHCS
17	2	SSHC01080	1/4-20 X 1-1/4 HHCS
18	4	SSHC90032S	#8-32 X 1/2 HEX CAP
19	2	SSSC01048	1/4-20 X 3/4" SOC CAP SC
20	6	SSHC98032	10-32X1/2 HEX HD
21	4	WWL1/4	WASHER,LOCK,1/4
22	5	WWL8	WASHER,LOCK,#8
23	5	SSSC90032	#8-32 X 1/2 SOC CAP SC
24	4	SSSCM6X20	SCREW, SOCKET CAP
25	2	WWFS1/4	WASHER,FLAT,SAE,1/4
26	6	WWFS10	WASHER, FLAT, #10, SAE
27	6	WWL10	WASHER,LOCK,#10,S/S

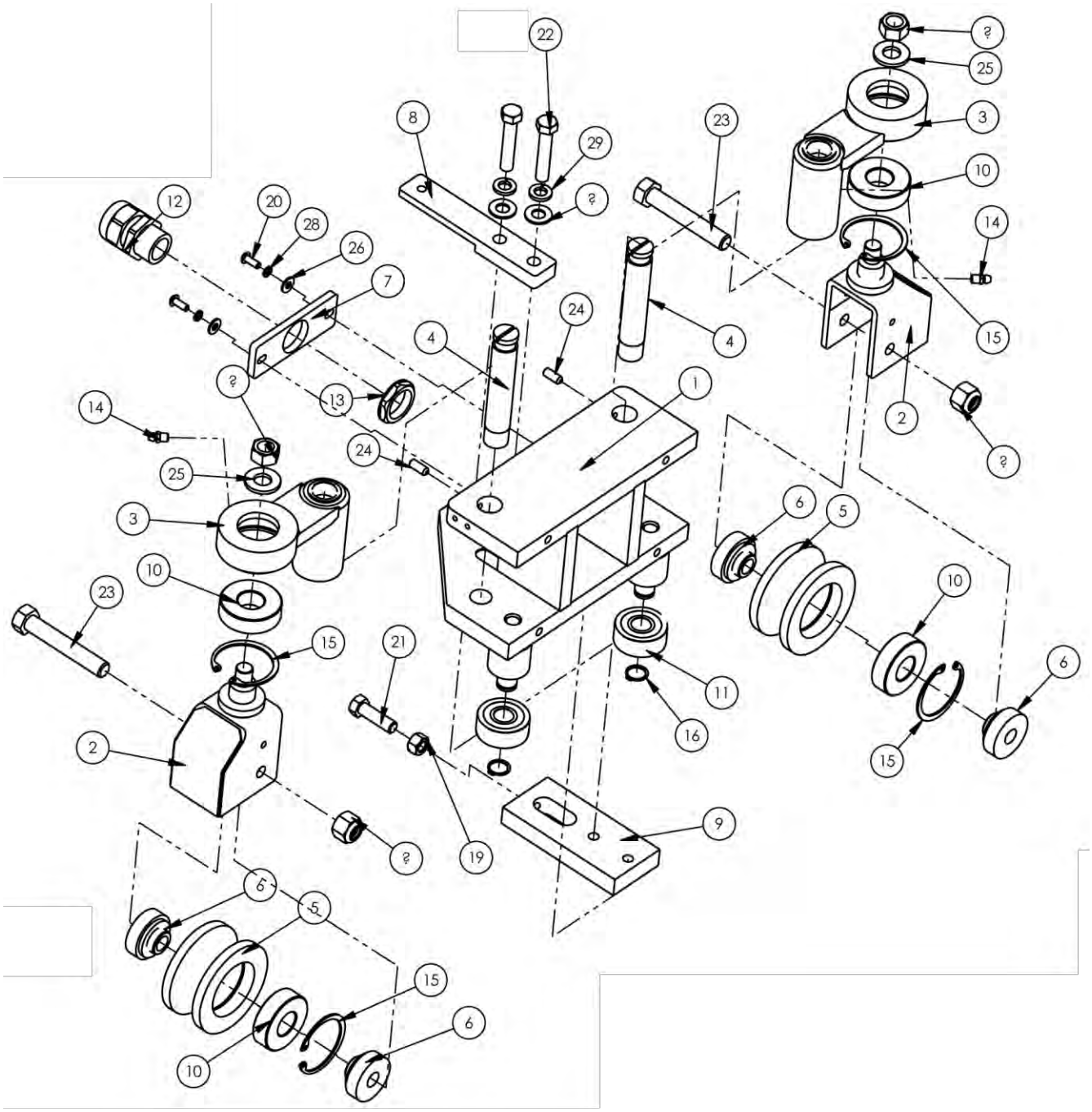
22
8
29
?
23
?
25
3
10
14
15
12
20
28
26
7
24
4
4
1
13
?
14
24
25
3
2
?
6
5
10
23
15
21
11
16
10
6
15
2
19
9
?
6
5
15
6
10

13453400A Carriage Guide Assembly

AAC Drawing Number 9001193 Rev 6

NO.	QTY	PART #	DESCRIPTION
1	1	13453401A	CARRIAGE GUIDE FRAME ASSY
2	2	13453404	ROLLER YOKE ASSY
3	2	13453408	GUIDE ARM ASSY.
4	2	13453411	STUD, ROLLER BEARING
5	2	13453413	ROLLER, GUIDE
6	4	13453414	HUB, ROLLER GUIDE
7	1	13453415	PLATE, CABLE HOLDER
8	1	13453416	MOUNT, CABLE GUIDE
9	1	13453418	MOUNT, BEARING BLOCK, REA
10	4	BB1L017	BEARING,BALL,.787B
11	2	BB305702C	BEARING,CAMROLLER
12	1	FF3460	STRAIN RELIEF,LIQ TIGHT
13	1	FF8465	NUT,LOCK,3/4NPT,NYLON,BLK
14	2	MM1095K44	GREASE FITTING, 1/4-28
15	4	MMH0-185	CLIP RING INT,1.962 OD
16	2	MMSH-59	CLIP RING EXT, .546 ID
17	2	NNE1/2-13	NUT,NYLOCK,1/2-13
18	2	NNH1/2-13	NUT,HEX,1/2-13
19	1	NNH3/8-16	3/8-16 HEX NUT
20	2	SSBC98032	#10-32 X 1/2 BUT HEAD
21	1	SSHC25080	3/8-16 X 1-1/4 HEX HEAD
22	2	SSHC25128	3/8-16 X 2 HEX HEAD
23	2	SSHC45192	1/2-13 X 3 HEX HEAD
24	2	SSSS01040	SCREW, SET, 1/4-20 X 5/8
25	2	WWFS1/2	WASHER,FLAT,SAE,1/2
26	2	WWFS10	WASHER, FLAT, #10, SAE
27	2	WWFS3/8	WASHER,FLAT,SAE,3/8
28	2	WWL10	#10 LW
29	2	WWL3/8	WASHER, LOCK, 3/8

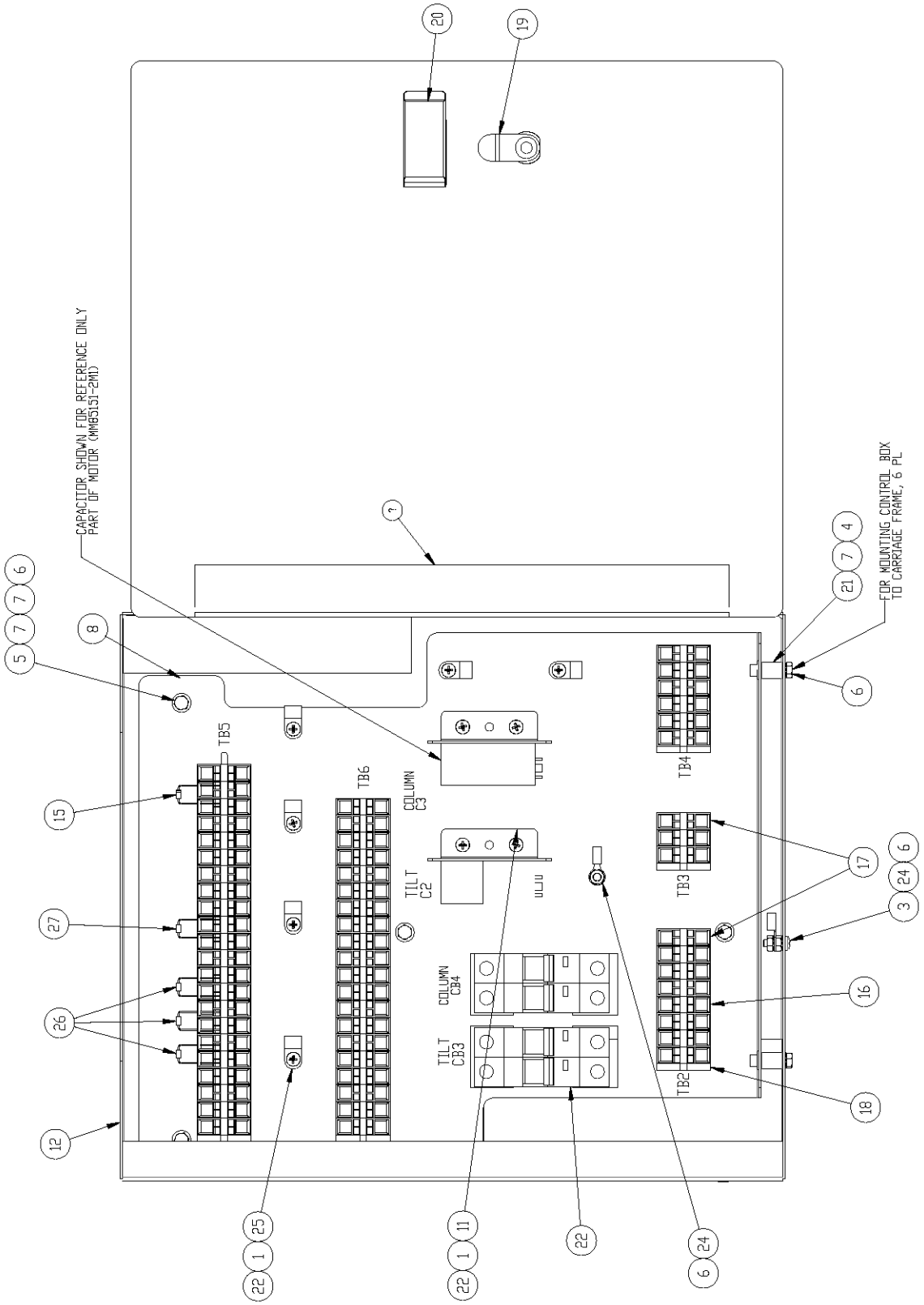
CAPACITOR SHOWN FOR REFERENCE ONLY
PART OF MOTOR (MMB5151-2M1)
FOR MOUNTING CONTROL BOX
TO CARRIAGE FRAME, 6 PL
TB5
TB6
COLUMN
C3
TILT
C2
TB4
TB3
TB2
COLUMN
CB4
TILT
CB3

134549000B Control Box Assembly

AAC Drawing Number 9001516 Rev 1

NO.	QTY	PART#	DESCRIPTION
1	AR	1345LAB1	LABEL
2	1	13459001B	SUB PANEL, CARRIAGE -3&4B
3	2	13459004A	MOUNTING BRACKET, CAPACIT
4	1	13459006	CONTROL BOX 11345
5	6	AAF3/16	CLAMP, BLACK PLASTIC
6	1	FF1N4937	DIODE,FAST 200NS,1A
7	57	FF264-341	TERMBLK,WAGO,TOP,DUAL,GRY
8	2	FF264-347	TERMBLK,WAGO,TOP,DUAL,GRN
9	5	FF264-371	TERMBLK,WAGO,TOP,END
10	2	FFL722C	BREAKER, CIRCT. THERM-MAG
11	1	FFR4.7K	RESISTOR, 4.7K, 1/4W.5%
12	3	FFR47	RESISTOR, 47, 1/4W
13	1	MM1770A12	DOOR LATCH, CAM, KEYED
14	6	MM9376K141	ISOLATOR, URETHANE
15	1	MM40450010	FASTENER,SLIDE LOCK
16	10	NNK8-32	NUT,KEP,8-32
17	4	SSHC98080	#10-32 X 1-1/4 HEX CAP
18	10	SSPP90024	#8-32 X 3/8 PAN HD PHIL
19	1	SSPP90032	SCREW,8-32 PAN HD PHIL
20	2	SSSC90016	#8-32 X 1/4 SOC CAP SC
21	2	TTSRBS82908	TERMINAL,STAR RING,#8,14-18
22	6	WWF8	WASHER, FLAT #8
23	10	WWL8	#8 LW

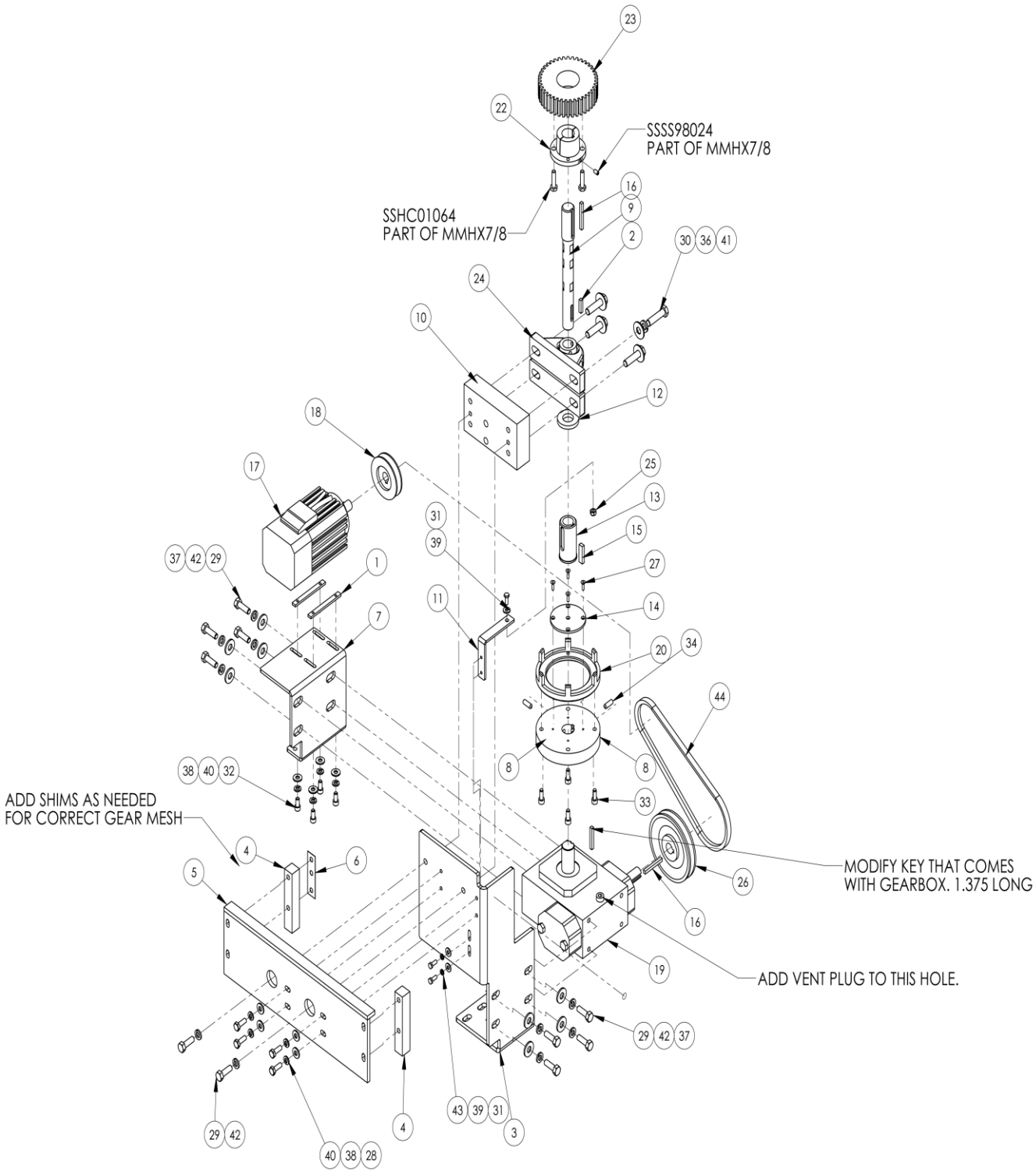
SSSS98024
PART OF MMHX7/8
SSHC01064
PART OF MMHX7/8
ADD SHIMS AS NEEDED
FOR CORRECT GEAR MESH
MODIFY KEY THAT COMES
WITH GEARBOX. 1.375 LONG
ADD VENT PLUG TO THIS HOLE.

134553500D Gear Box Assembly

AAC Drawing Number 9002524 Rev 4

NO	QTY	PART #	DESCRIPTION
1	2	0211-209	PLATE,NUT,10-32@2.25 CTC
2	1	132556-258	KEY, 3/16 X .813 L
3	1	1345043	BRKT, GEAR BOX, LOWER
4	2	1345046	SPACER, GEARBOX MOUNT
5	1	1345048	PLATE, MOUNTING, GEARBOX
6	1	1345049	SHIM. .015 S/S
7	1	1345055	BRKT,GEAR BOX MOUNT
8	1	13453501	PLATE, CLUTCH ADAPTER
9	1	13453503B	SHAFT, GEAR DRIVE
10	1	13453505	BLOCK, BEARING MOUNTING
11	1	13453512A	BRKT, ANTI ROTATE, CLUTCH
12	1	13453514	SPACER, CLUTCH
13	1	13453516	SLEEVE, CLUTCH
14	1	13453519A	PLATE,CLUTCH, LOWER
15	1	13453523	KEY,5MM X8MM X 1 1/4
16	2	13453524	KEY,3/16 X 1.68L
17	1	4059-DC1500ABA1	MOTOR,W/DC CONTROLLER
18	1	4059-PM58S	PULLEY,58MM,14MM BORE
19	1	MM20UM1	GEAR BOX, MOD.
20	1	MM231572	COUPLING
21	1	MM231631M1	CLUTCH
22	1	MMHX7/8	BUSH,TAPER LOCK 7/8 BORE
23	1	MMS1040	GEAR, 40T, 10P
24	2	MMVPS-112	BEARING,PILLOW BLOCK 3/4B
25	1	NNE10-32	NUT,ELASTIC LOCK
26	1	PP3X910	PULLEY, V BELT, MOTOR, 4"
27	4	SSFC80032	6-32 X 1/2 FLAT CAP
28	4	SSHC01048	1/4-20 X 3/4 HEX CAP
29	10	SSHC10064	5/16-18 X 1 HHCS
30	4	SSHC25096	3/8-16 X 1 1/2 HHCS
31	3	SSHC98032	10-32X1/2 HEX HD
32	4	SSSC01032	1/4-20X1/2 SOC CAP
33	4	SSSCM6X15	M6X15 SOC CAP SCREW
34	2	SSSS01048	1/4-20 X 3/4
35	1	SSSS98024	10-32X 3/8 SOC SET SC
36	4	WWF3/8	WASHER,FLAT,3/8 OR 10MM
37	8	WWF5/16	WASHER,FLAT,5/16
38	8	WWFS1/4	WASHER,FLAT,SAE,1/4
39	3	WWFS10	WASHER, FLAT, #10, SAE
40	8	WWL1/4	WASHER,LOCK,1/4
41	4	WWL3/8	WASHER,LOCK, 3/8
42	10	WWL5/16	WASHER,LOCK, 5/16
43	2	WWL10	WASHER,LOCK,#10
44	1	ZX3823	V-BELT

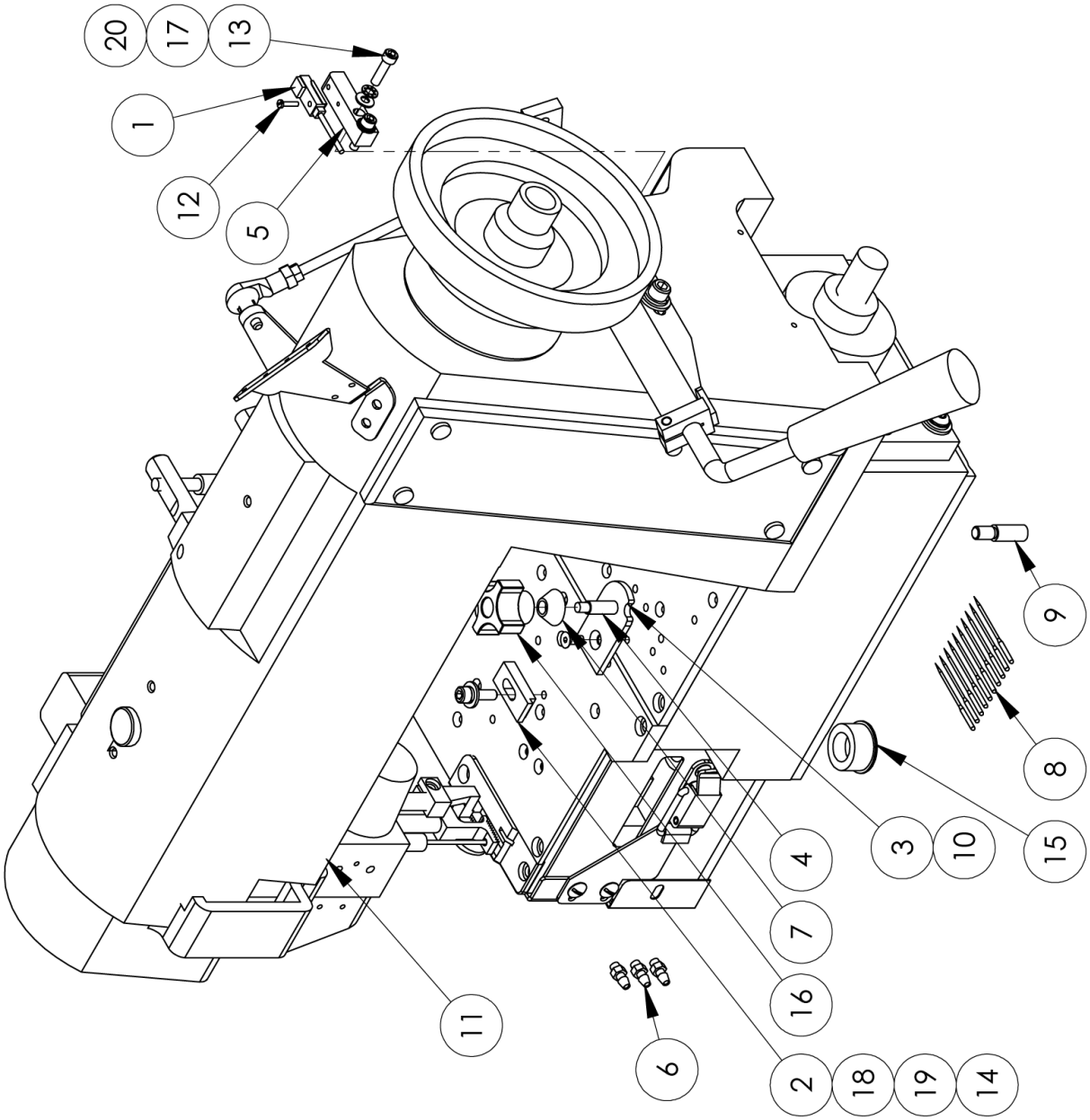
20
17
13
1
12
5
9
8
3
10
15
4
7
16
11
6
2
18
19
14

SSIN-300UX6M Sewing Head

AAC Drawing Number 9002945 Rev 4

NO	QTY	PART #	DESCRIPTION
1	1	1278-7055D	PROX SWITCH W/PLUG,12"
2	1	1345-004	BLOCK, STOP FOR BINDER
3	1	1345-009A	SPACER,1/8X1X1.8L
4	1	1345-009B	SLEEVE,.25 ODX.19 IDX.5LS
5	1	1345-505	BLOCK, FOOT UP SENSOR
6	3	AAF11752-3	BRASS BARB FOR AIRLINE.
7	1	RRBEEHIVEH	SPRING,HEAVY BEEHIVE
8	10	SN62X59	NEEDLE,SIZE 24/180
9	1	SSAS020048	SCREW,ALLEN SHOULDER
10	1	SSFC90024	8-32 X 3/8 FL ALN CAP
11	1	SSIN-300UX6	HEAD,MOD,GEN,TAPE EDGE
12	1	SSPS50024	2-56 X 3/8 PAN HD SC
13	2	SSSC90040	8-32 X 5/8 SOC CAP SC
14	1	SSSC95040	10-24 X1, SOC CAP
15	1	TA2351004-R0	RUBBER PLUG
16	1	TTCL1APPK1	PLASTIC KNOB, #10-32
17	2	WWB5/32	WASHER, FLAT, 5/32", BRAS
18	1	WWFS10	WASHER, FLAT, #10, SAE
19	1	WWL10	WASHER,LOCK,#10
20	2	WWSI8	WASHER,INT. TOOTH,8

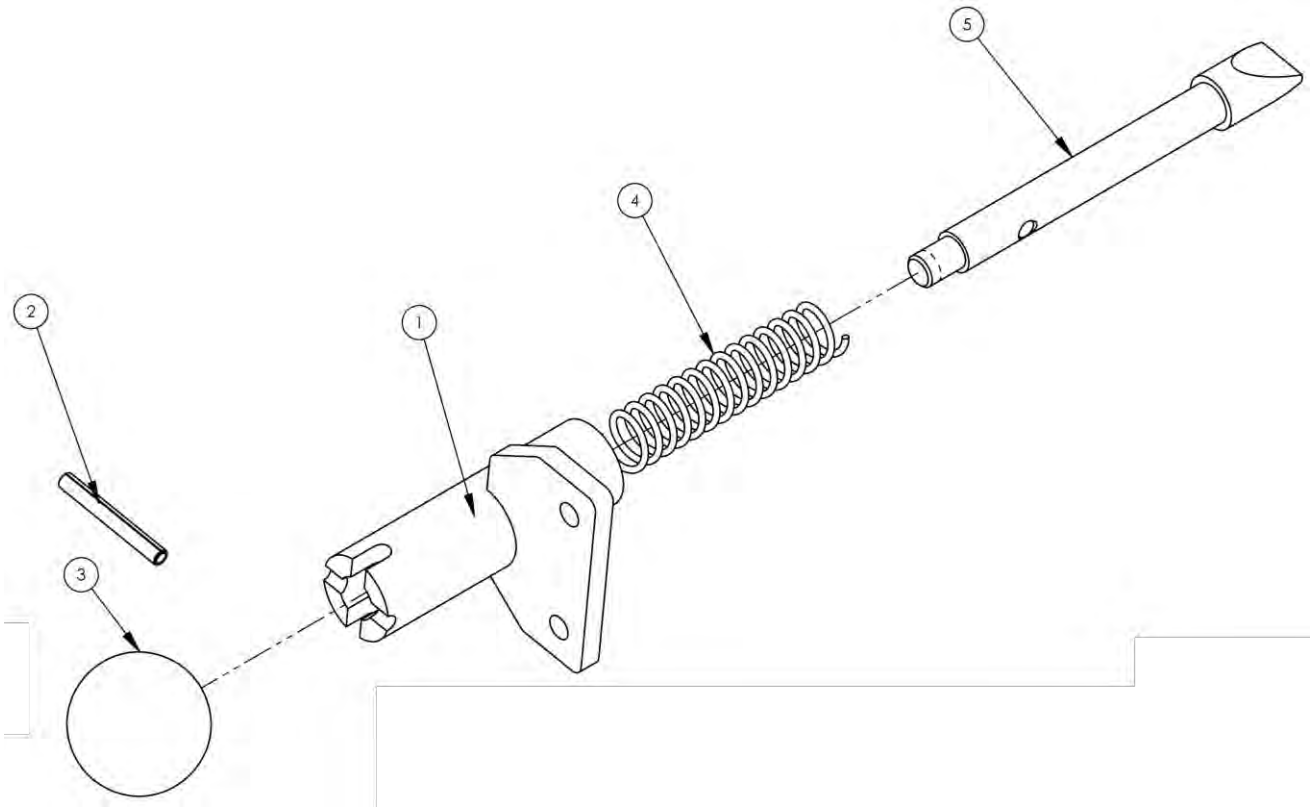

13453800 Gear Lock Assembly

AAC Drawing Number 9001130 Rev 1

NO.	QTY	PART #	DESCRIPTION
1	1	13453801	SUPPORT GEAR LOCK ASSY.
2	1	IIS012X096	SPRING PIN, 3/16X1.5
3	1	MM61095K53	KNOB, BALL,3/8-16 TAP
4	1	RRLC0742HJ	SPRING, COMP. .072X.66X3
5	1	13453804	MANDREL,GEAR LOCK

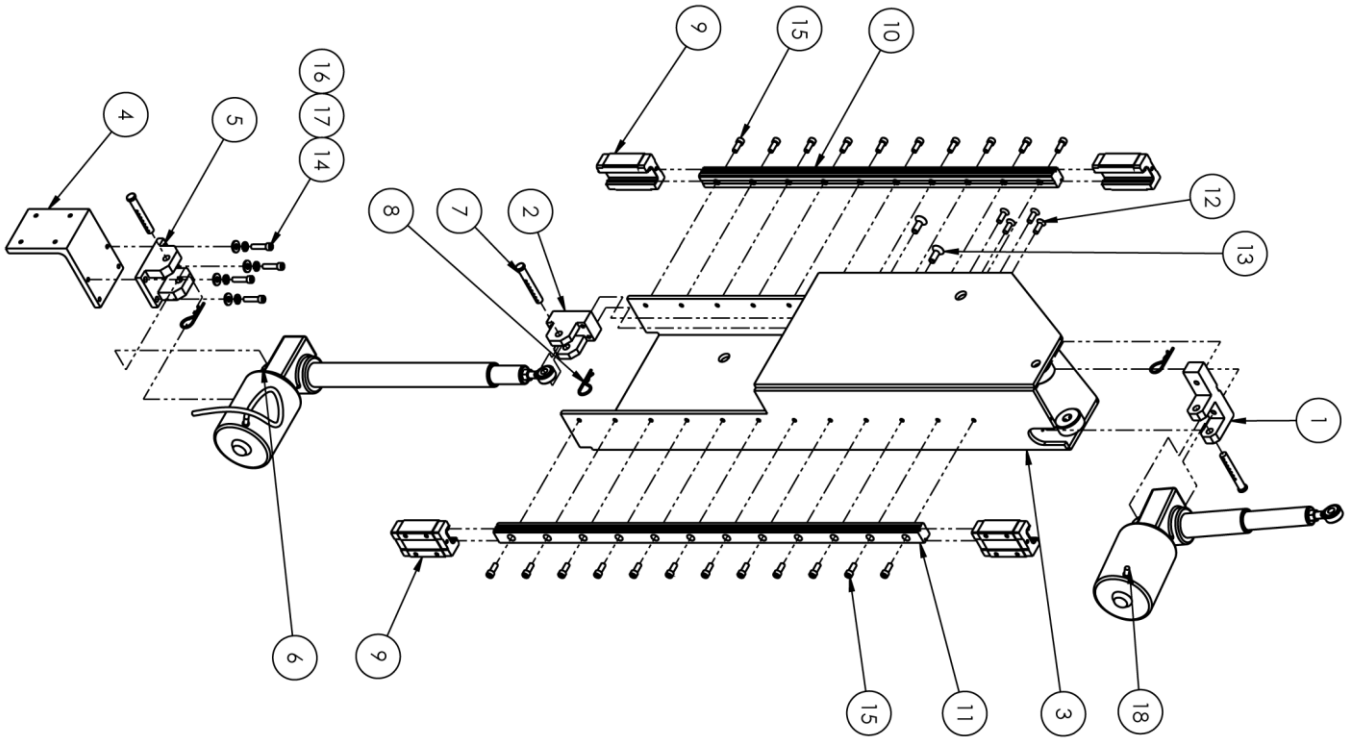

13453600 Column Assembly

AAC Drawing Number 9001525 Rev 2

NO.	QTY	PART #	DESCRIPTION
1	1	13453604	PIVOT, SUPPORT, ACTUATOR
2	1	13453614	CLEVIS, ACTUATOR
3	1	13453615	COLUMN,SEWING HEAD
4	1	13453620	ACTUATOR,BRKT,COLUMN
5	1	13453622	PIVOT,SUPPORT, ACTUATOR
6	1	MM85151-10M1	ACTUATOR,MOD
7	3	MM98330A245	CLEVIS PIN 2.25LG STL
8	3	MM98335A064	SPRING CLIP
9	4	MMAGH25CAN	LINEAR BEARING
10	1	MMAGR25590N	RAIL,LINEAR AG SERIES
11	1	MMAGR25710N	RAIL, LINEAR, AG SERIES
12	4	SSFC01048	1/4-20 X 3/4 FLAT CAP
13	2	SSFC10056	5/16-18X7/8 FLAT HD CAP
14	4	SSSC01064	1/4-20 X 1 SOC CAP
15	22	SSSC05040	1/4-28 X 5/8, SOC CAP
16	4	WWFS1/4	WASHER,FLAT,SAE,1/4
17	4	WWL1/4	WASHER,LOCK,1/4
18	1	MM85151-2M1	ACTUATOR, MOD

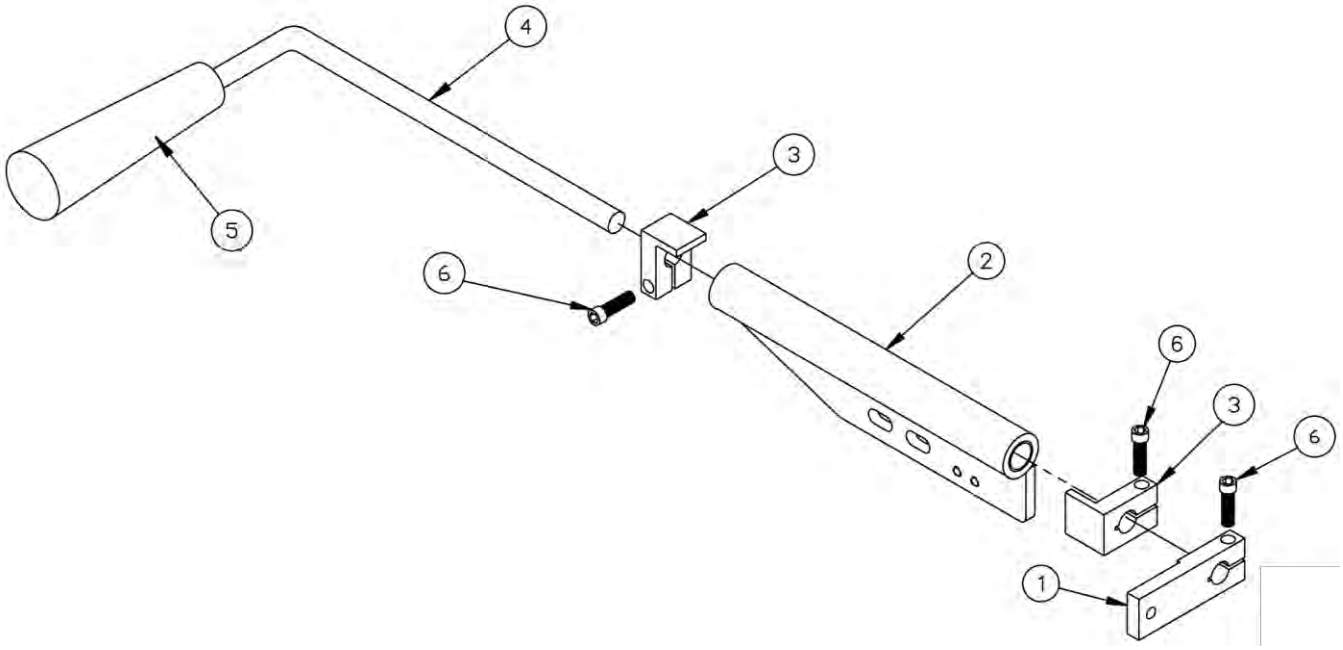

1345-500 Footlift Pivot Link Assembly

AAC Drawing Number 192500B Rev 7

NO.	QTY	PART #	DESCRIPTION
1	1	1349518	Foot Lift Lever
2	1	1345-503	Pivot Bracket
3	2	1345077	Stop Clamp
4	1	1345-504	Pivot Arm
5	1	MMBTH-2	Handle
6	3	SSSC98048	Screw, Socket Cap
7	AR	1345-500INS	Instructions

1345-6WD1 Wiring Diagram

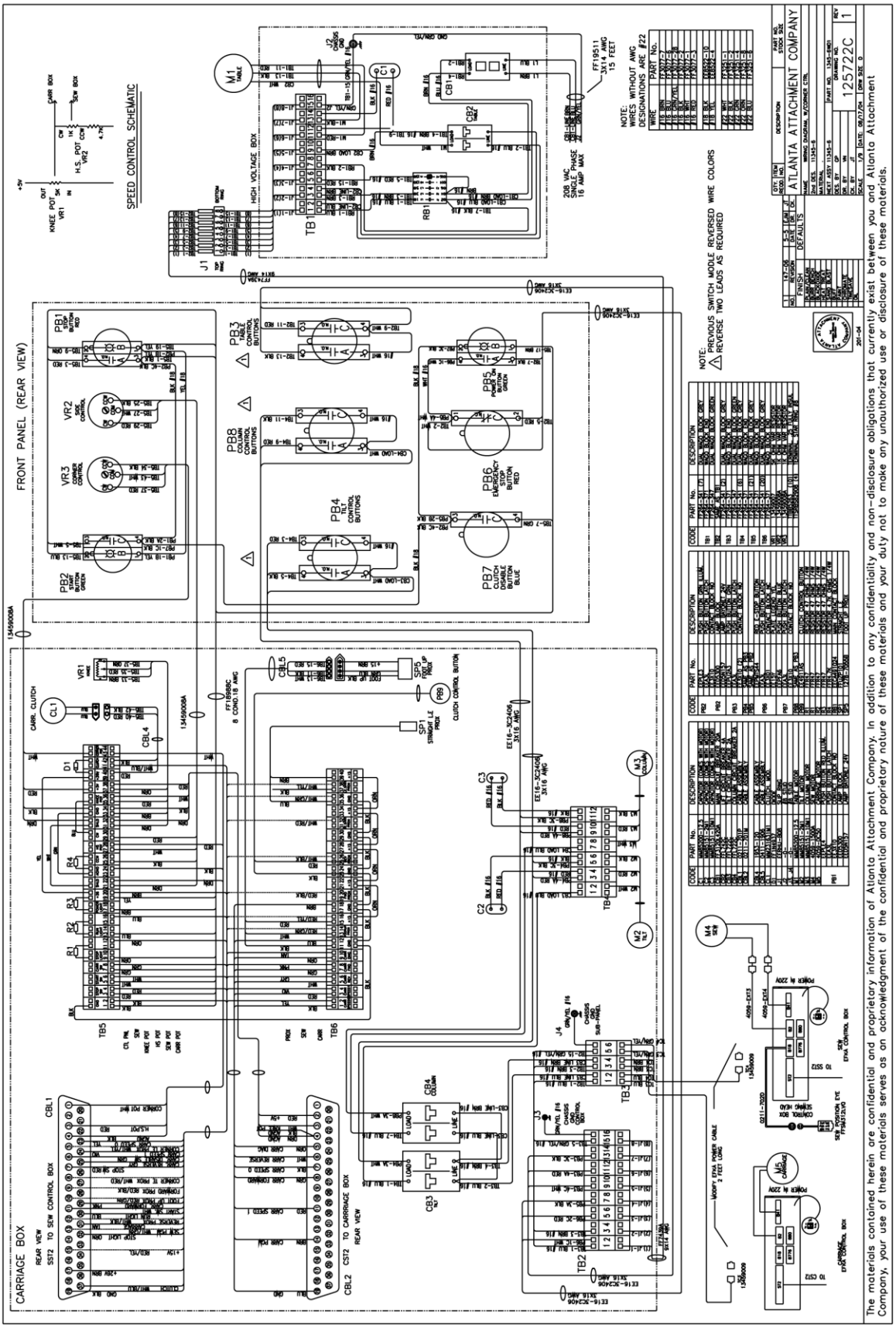

Atlanta Attachment Company (AAC) Statement of Warranty

Manufactured Products

Atlanta Attachment Company warrants manufactured products to be free from defects in material and workmanship for a period of eight hundred (800) hours of operation or one hundred (100) days whichever comes first. Atlanta Attachment Company warrants all electrical components of the Serial Bus System to be free from defects in material or workmanship for a period of thirty six (36) months.

Terms and Conditions:

- AAC Limited Warranty becomes effective on the date of shipment.
- AAC Warranty claims may be made by telephone, letter, fax or e-mail. All verbal claims must be confirmed in writing.
- AAC reserves the right to require the return of all claimed defective parts with a completed warranty claim form.
- AAC will, at its option, repair or replace the defective machine and parts upon return to AAC.
- AAC reserves the right to make the final decision on all warranty coverage questions.
- AAC warranty periods as stated are for eight hundred (800) hours or one hundred (100) days whichever comes first.
- AAC guarantees satisfactory operation of the machines on the basis of generally accepted industry standards, contingent upon proper application, installation and maintenance.
- AAC Limited Warranty may not be changed or modified and is not subject to any other warranty expressed or implied by any other agent, dealer, or distributor unless approved in writing by AAC in advance of any claim being filed.

What Is Covered

- Electrical components that are not included within the Serial Bus System that fail due to defects in material or workmanship, which are manufactured by AAC are covered for a period of eight hundred (800) hours.
- Mechanical parts or components that fail due to defects in material or workmanship, which are manufactured by AAC.
- Purchased items (sewing heads, motors, etc.) will be covered by the manufacturers (OEM) warranty.
- AAC will assist in the procurement and handling of the manufacturers (OEM) claim.

What Is Not Covered

- Parts that fail due to improper usage, lack of proper maintenance, lubrication and/or modification.
- Damages caused by; improper freight handling, accidents, fire and issues resulting from unauthorized service and/or personnel, improper electrical, plumbing connections.
- Normal wear of machine and parts such as Conveyor belts, "O" rings, gauge parts, cutters, needles, etc.
- Machine adjustments related to sewing applications and/or general machine operation.
- Charges for field service.
- Loss of time, potential revenue, and/or profits.
- Personal injury and/or property damage resulting from the operation of this equipment.

Declaración de Garantia

Productos Manufacturados

Atlanta Attachment Company garantiza que los productos de fabricación son libres de defectos de mate-rial y de mano de obra durante un periodo de ochocientos (800) horas de operación o cien (100) días cual llegue primero. Atlanta Attachment Company garantiza que todos los componentes del Serial bus son libres de defectos de material y de mano de obra durante un periodo de treinta y seis (36) meses.

Términos y Condiciones:

- La Garantía Limitada de AAC entra en efecto el día de transporte.
- Reclamos de la Garantía de AAC pueden ser realizados por teléfono, carta, fax o correo electrónico. Todo reclamo verbal tiene que ser confirmado vía escrito.
- AAC reserva el derecho para exigir el retorno de cada pieza defectuosa con un formulario de reclamo de garantía.
- AAC va, según su criterio, reparar o reemplazar las máquinas o piezas defectuosas devueltas para AAC.
- AAC reserva el derecho para tomar la decisión final sobre toda cuestión de garantía.
- Las garantías de AAC tiene una validez de ochocientas (800) horas o cien (100) días cual llega prim-ero.
- AAC garantiza la operación satisfactoria de sus máquinas en base de las normas aceptadas de la industria siempre y cuando se instale use y mantenga de forma apropiada.
- La garantía de AAC no puede ser cambiado o modificado y no está sujeto a cualquier otra garantía implicado por otro agente o distribuidor menos al menos que sea autorizado por AAC antes de cual-quier reclamo.

Lo Que Está Garantizado

- Componentes eléctricos que no están incluidos dentro del sistema Serial Bus que fallen por defectos de materiales o de fabricación que han sido manufacturados por AAC son garantizados por un peri-odo de ochocientas (800) horas.
- Componentes mecánicos que fallen por defectos de materiales o de fabricación que han sido manu-facturados por AAC son garantizados por un periodo de ochocientas (800) horas.
- Componentes comprados (Motores, Cabezales,) son protegidos debajo de la garantía del fabricante.
- AAC asistirá con el manejo de todo reclamo de garantía bajo la garantía del fabricante.

Lo Que No Está Garantizado

- Falla de repuestos al raíz de uso incorrecto, falta de mantenimiento, lubricación o modificación.
- Daños ocurridos a raíz de mal transporte, accidentes, incendios o cualquier daño como resultado de servicio por personas no autorizados o instalaciones incorrectas de conexiones eléctricas o neumáti-cas.
- Desgaste normal de piezas como correas, anillos de goma, cuchillas, agujas, etc.
- Ajustes de la máquina en relación a las aplicaciones de costura y/o la operación en general de la máquina.
- Gastos de Reparaciones fuera de las instalaciones de AAC
- Pérdida de tiempo, ingresos potenciales, y/o ganancias.
- Daños personales y/o daños a la propiedad como resultado de la operación de este equipo.

Atlanta Attachment Company
362 Industrial Park Drive
Lawrenceville, GA 30046
770-963-7369
www.atlatt.com

Printed in the USA