Model **1342ZTC**

Revision 2.5 Updated Jan 4, 2016

Technical Manual & Parts Lists

Atlanta Attachment Company

362 Industrial Park Drive

Lawrenceville, GA 30046

770-963-7369 • www.atlatt.com

ATLANTA ATTACHMENT COMPANY, INC.

Confidential and Proprietary Information

The materials contained herein are confidential and proprietary information of Atlanta Attachment Company. In addition to any confidentiality and non-disclosure obligations that currently exist between you and Atlanta Attachment Company, your use of these materials serves as an acknowledgment of the confidential and proprietary nature of these materials and your duty not to make any unauthorized use or disclosure of these materials.

All materials contained herein are additionally protected by United States Copyright law and may not be used, disclosed, reproduced, distributed, published or sold without the express written consent of Atlanta Attachment Company, which consent may be withheld in Atlanta Attachment Company's sole discretion. You may not alter or remove any copyright, trademark or other notice from copies of these materials.

IMPORTANT

It is important to read and understand the information contained within this manual before attempting to operate the machine. Atlanta Attachment Co., Inc. shall not be held liable for damage resulting from misuse of the information presented within, and reserves the right to change the information contained within, without prior notification.

Contents

Important Safety Instruction 1
Liability 2
Safety Equipment on the Machines 3
Protective Eyewear 4
Important Notices 5
Maintenance 7
Repair 8
A Word to the End User 9
Safety Precautions 9
Parameter Settings 10
Assembly Drawings & Parts Lists 11
11342ZTC Long-Arm Label Sewer 13
1342Z-100A Sewing Head Assembly 15
1342Z-200 Feed Belt Assembly 17
1342Z-400C Belt Drive Assembly 19
1342012 Drive Sub-Assembly 21
342Z-500 Stand Assembly 23
1342Z-550 Panel Assembly 24
1342010 Eccentric Assembly 25
1342ZT-PD Pneumatic Diagram 26
1342ZT-WD Wiring Diagram 27

Important Safety Instruction

This part of the Instruction Material is provided for the safe use of your equipment. It contains important information to help work safely with the unit and describes the dangers inherent in machinery. Some of these dangers are obvious, while others are less evident.

Mandatory Information

All persons operating and/or working on the 1342ZTC Long-Arm Label Sewer should read and understand all parts of the Safety Instructions. This applies, in particular, for persons who only operate and/or work on the unit occasionally (e.g. for maintenance and repair). Persons who have difficulty reading must receive particularly thorough instruction.

Scope of the Instruction Material

- The Instruction Material comprises:
- Safety information
- Operator Instructions
- Electrical and Pneumatic diagrams

And may also include;

- A list of recommended spare parts
- Instruction Manual(s) for components made by other manufacturers
- The layout and installation diagram containing information for installation

Intended Use

Our machines are designed and built in line with the state of the art and the accepted safety rules. However, all machines may endanger the life and limb of their users and/or third parties and be damaged or cause damage to other property, particularly if they are operated incorrectly or used for purposes other than those specified in the Instruction Manual.

Exclusion of Misuse

Non-conforming uses include, for example, using the equipment for something other than it was designed for, as well as operation without duly installed safety equipment. The risk rests exclusively with the end user.

Conforming use of the machine includes compliance with the technical data, information and regulations in all parts of the complete Instruction Material, as well as compliance with the maintenance regulations. All local safety and accident prevention regulations must also be observed.

Liability

The machine should only be operated when in perfect working order, with due regard for safety and the potential dangers, as well as in accordance with the Instruction Material. Faults and malfunctions capable of impairing safety should be remedied immediately. We cannot accept any liability for personal injury or property damage due to operator errors or non-compliance with the safety instructions contained in this booklet. The risk rests exclusively with the end user.

The Instruction Material should always be kept near the machine so that it is accessible to all concerned.

The local, general, statutory and other binding regulations on accident prevention and environmental protection must also be observed in addition to the Instruction Material. The operating staff must be instructed accordingly. This obligation also includes the handling of dangerous substances and provision/use of personal protective equipment.

The Instruction Material should be supplemented by instructions, including supervisory and notification duties with due regard for special operational features, such as the organization of work, work sequences, the personnel deployed, etc.

The personnel's awareness of the dangers and compliance with the safety regulations should be checked at irregular intervals.

Choice and Qualification of Personnel

Ensure that work on the machine is only carried out by reliable persons who have been appropriately trained for such work - either within the company, by our field staff or at our office - and who have not only been duly appointed and authorized, but are also fully familiar with the local regulations. Work on the machine should only be carried out by skilled personnel, under the management and supervision of a duly qualified engineer.

This not only applies when the machine is used for production, but also for special work associated with its operation (start-up and maintenance), especially when it concerns work on the hydraulic or electrical systems, as well as on the software/serial bus system.

Training

Everyone working on or with the machine should be duly trained and informed with regard to correct use of the safety equipment, the foreseeable dangers which may arise during operation of the machine and the safety precautions to be taken. In addition, the personnel should be instructed to check all safety mechanisms at regular intervals.

Responsibilities

Clearly define exactly who is responsible for operating, setting-up, servicing and repairing the machine. Define the responsibilities of the machine operator and authorize him to refuse any instructions by third parties if they run contrary to the machine's safety. This applies in particular for the operators of machines linked to other equipment. Persons receiving training of any kind may only work on or with the machine under the constant supervision of an experienced operator. Note the minimum age limits permitted by law.

A Word to the Operator

The greatest danger inherent in our machines:
is that of fingers, hands or loose clothing being drawn into a machine by live, coasting or rotating tools or assemblies or of being cut by sharp tools or burned by hot elements.

ALWAYS BE CONSCIOUS OF THESE DANGERS!

Safety Equipment on the Machines

All machines are delivered with safety equipment, which shall not be removed or bypassed during operation.

The correct functioning of safety equipment on machines and systems should be checked every day and before every new shift starts, after maintenance and repair work, when starting up for the first time and when restarting (e.g. after prolonged shutdowns).

If safety equipment has to be dismantled for setting-up, maintenance or repair work, such safety equipment shall be replaced and checked immediately upon completing the maintenance or repair work. All protective mechanisms shall be fitted and fully operational whenever the machine is at a standstill or if it has been shut down for a longer period of time.

Damage

If any changes capable of impairing safety are observed in the machine or its mode of operation, such as malfunctions, faults or changes in the machine or tools, appropriate steps must be taken immediately, the machine switched off and a proper lockout tagout procedure followed. The machine should be examined for obvious damage and defects at least once per shift. Damage found shall be immediately remedied by a duly authorized person before resuming operation of machine.

The machine should only be operated when in perfect working order and when all protective mechanisms and safety equipment, such as detachable protective mechanisms, emergency STOP systems, etc. are in place and operational.

Faults or Errors

The machine must be switched off and all moving or rotating parts allowed to come to a standstill and secured against accidental restart before starting to remedy any faults or errors.

Signs on the Machine

Safety and danger signs on the machine should be observed and checked at regular intervals to ensure that they are complete and undamaged. They should be clearly visible and legible at all times.
Clothing, Jewelry, Protective Equipment
Long loose hair, loose-fitting clothes, gloves and jewelry, including rings, should be avoided in order to avoid injuries due to being caught, drawn in and wound up inside the machine.

Protective Eyewear

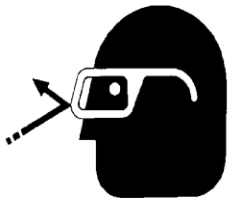

Protective eyewear that has been tested by the local authorities should be worn whenever there is a possibility of loose or flying objects or particles such as when cleaning the machine with compressed air.

Tools

Always count the number of tools in your possession before starting work on the machine. This will allow you to check that no tools have been left behind inside the machine. Never leave a tool in the machine while working.

Oils, Lubricants, Chemicals

Note the applicable safety regulations for the product used.

No Smoking, Fire, Explosion Hazard

Smoking and open flame (e.g. welding work) should be prohibited in the production area due to the risk of fire and explosions.

Workplace

A clear working area without any obstructions whatsoever is essential for safe operation of the machine. The floor should be level and clean, without any waste.

The workplace should be well lit, either by the general lighting or by local lights.

Emergency STOP

The emergency STOP buttons bring all machine movements to a standstill. Make sure you know exactly where they are located and how they work. Try them out. Always ensure easy access to the nearest emergency STOP button while working on the machine.

First Aid

1. Keep calm even when injured.
2. Clear the operator from the danger zone. The decision of what to do and whether to seek additional assistance rests entirely with you, particularly if someone has been trapped.
3. Give First Aid. Special courses are offered by such organizations as the employers' liability insurance association. Your colleagues should be able to rely on you and vice versa.
4. Call an ambulance. Do you know the telephone numbers for the ambulance service, police and fire service?

Important Notices

Reporting and Fighting Fires

Read the instructions posted in the factory with regard to reporting fires and the emergency exits. Make sure you know exactly where the fire extinguishers and sprinkler systems are located and how they are operated. Pass on the corresponding information to the firemen when they arrive. Ensure there are enough signs to avoid fire hazards.

The following fire extinguishers may be used:
- Dry powder extinguishers, ABC fire-extinguishing powder.
- Carbon dioxide fire extinguishers to DIN 14461 for electronic components. Great care must be exercised when using carbon dioxide fire extinguishers in confined, badly ventilated rooms (see DIN 14406 and 14270).

Isolate the machine from the power supply if a fire breaks out. Do not use water on burning electrical parts until it is absolutely certain that they have been completely disconnected from the power supply. Burning oils, lubricants, plastics and coatings on the machine can give off gases and vapors that may be harmful to your health.
A qualified person should be consulted to repair the damage after a fire.

Electrical Power Supply

Before undertaking any maintenance or repair work on the machine, switch off the electrical power to the machine at the main source and secure it with a padlock so that it cannot be switched on again without authorization.
In practice, this may mean that the technician, electrician and operator all attach their own padlock to the master switch simultaneously so that they can carry out their work safely. Locking extension plates should be available for multiple locks if required. The primary purpose for a lockout/tagout procedure is to protect workers from injury caused by unexpected energizing or start-up of equipment.

Energy sources (electrical/pneumatic/hydraulic, etc.) for the equipment shall be turned off or disconnected and the switches locked or labeled with a warning tag. It is the responsibility of the employer to establish control procedures. Follow lockout/tagout procedures before, setup and/or any service or maintenance work is performed, including lubrication, cleaning or clearance of jams.

Caution: The machine is still not completely de-energized even when the master switch is off.

- Electricity - The machine is always isolated from the electrical power supply whenever the master switch has been switched off. However, this does not apply for the power supply in the control cabinet, nor for equipment that does not draw its power via the master switch.

- Pneumatic / hydraulic energy - Almost all our machines carry compressed air. In addition to switching off the master switch, the air supply must also be disconnected and the machine checked to ensure it is depressurized before starting any work on the machine; otherwise the machine may execute uncontrolled movements.

- Kinetic energy - Note that some motors or spindles, for example, may continue to run or coast run on after being switched off.

- Potential energy - Individual assemblies may need to be secured if necessary for repair work.

Delivery of the Machine/Packaging

Note any markings on the packaging, such as weights, lifting points and special information. Avoid temperature fluctuations. Condensation may damage the machine.

Transport Damage

The packaging and machine must immediately be examined for signs of damage in transit. Such damage must be reported to the shipper/transporter within the applicable time limits. Contact Atlanta Attachment Company and/or your transport insurer immediately, if signs of damage are visible. Never operate a damaged machine.

Interim Storage

If the machine has to be stored temporarily, it must be oiled or greased and stored in a dry place where it is protected from the weather in order to avoid damage. A corrosion-inhibiting coating should be applied if the machine has to be stored for a longer period of time and additional precautions taken to avoid corrosion.

Transporting the Machine

Disconnect the machine from all external connections and secure any loose assemblies or parts. Never step under a suspended load. When transporting the machine or assemblies in a crate, ensure that the ropes or arms of a forklift truck are positioned as close to the edge of the crate as possible. The center of gravity is not necessarily in the middle of the crate. Note the accident prevention regulations, safety instructions and local regulations governing transport of the machine and its assemblies.

Only use suitable transport vehicles, hoisting gear and load suspension devices that are in perfect working order and of adequate carrying capacity. Transport should only be entrusted to duly qualified personnel.

Never allow the straps to rest against the machine enclosure and never push or pull sensitive parts of the machine. Ensure that the load is always properly secured. Before or immediately after loading the machine, secure it properly and affix corresponding warnings.
All transport guards and lifting devices must be removed before the machine is started up again. Any parts that are to be removed for transport must be carefully refitted and secured before the machine is started up again.

Workplace Environment

Our machines are designed for use in enclosed rooms: Permissible ambient temperature approx. 5 - 40 °C (40 - 104 °F). Malfunctions of the control systems and uncontrolled machine movements may occur at temperatures outside this range.
Protect against climatic influences, such as electrostatic charges, lightning strikes, hail, storm damage, high humidity, salinity of the air in coastal regions.

Protect against influences from the surroundings: no structure-borne vibrations, no grinding dust, or chemical vapors.
Protect against unauthorized access.
Ensure that the machine and accessories are set up in a stable position.
Ensure easy access for operation and maintenance (Instruction Manual and layout diagram); also verify that the floor is strong enough to carry the weight of the machine.

Local Regulations

Particular attention must be paid to local and statutory regulations, etc. when installing machines and the plant (e.g. with regard to the specified escape routes). Note the safety zones in relation to adjacent machines.

Maintenance

General Safety Instructions

The machine shall be switched off, come to a standstill and be secured so that it cannot be switched on again inadvertently before starting any maintenance work whatsoever. Use proper lockout/tagout procedures to secure the machine against inadvertent startup.
Remove any oil, grease, dirt and waste from the machine, particularly from the connections and screws, when starting the maintenance and/or repair work. Do not use any corrosive-cleaning agents. Use lint-free rags.
Retighten all screw connections that have to be loosened for the maintenance and repair work. Any safety mechanisms that have to be dismantled for setting-up, maintenance or repair purposes must be refitted and checked immediately after completing the work.

Maintenance, Care, Adjustment

The activities and intervals specified in the Instruction Manual for carrying out adjustments, maintenance and inspections must be observed and parts replaced as specified.

All hydraulic and pneumatic lines should be examined for leaks, loose connections, rubbing and damage whenever the machine is serviced. Any defects found must be remedied immediately.

Waste, Disassembly, Disposal

Waste products should be cleared from the machine as soon as possible as not to create a fire hazard. Ensure that fuels and operating lubricants, as well as replacement parts are disposed of in a safe and ecologically acceptable manner. Note the local regulations on pollution control.

When scrapping (disassembling) the machine and its assemblies, ensure that these materials are disposed of safely. Either commission a specialist company familiar with the local regulations or note the local regulations when disposing of these materials yourself. Materials should be sorted properly.

Repair

Replacement Parts

We cannot accept any liability whatsoever for damage due to the use of parts made by other manufacturers or due to unqualified repair or modification of the machine.

Repair, Electrical

The power supply must be switched off (master switch off) and secured so that it cannot be switched on again inadvertently before starting any work on live parts.

Those parts of the machine and plant on which inspection, maintenance or repair work is to be carried out must be isolated from the power supply, if specified. The isolated parts must first be checked to determine that they are truly de-energized before being grounded and short-circuited. Adjacent live parts must also be isolated.

The protective measures implemented (e.g. grounding resistance) must be tested before restarting the machine after all assembly or repair work on electric parts.

Signal generators (limit switches) and other electrical parts on the safety mechanisms must not be removed or bypassed. Only use original fuses or circuit overloads with the specified current rating. The machine must be switched off immediately if a fault develops in the electrical power supply.

The electrical equipment of our machines must be checked at regular intervals and any defects found must be remedied immediately.

If it is necessary to carry out work on live parts, a second person should be on hand to operate the emergency OFF switch or master switch with voltage release in the event of an emergency. The working area should be cordoned off and marked by a warning sign. Only use electrically insulated tools.

Ventilation/Hazardous Gases

It is the end users responsibility to ensure adequate ventilation is provided to exhaust any and all noxious or hazardous gases that may be present in the working environment.

Hydraulic and Pneumatic Systems

Work on hydraulic or pneumatic equipment shall only be carried out by persons with training, knowledge and experience of hydraulic systems. Pressure lines shall be depressurized before starting any repair work.

General Liability

Liability for machine damage and personal injury is extinguished completely if any unauthorized conversions or modifications are undertaken. The machine must not be modified, enlarged or converted in any way capable of affecting safety without the manufacturer's prior approval.

Starting Machine Movements

Read the Instruction Manual carefully to establish which keys and functions start machine movements.

A Word to the End User

The end user has sole responsibility to enforce the use of safety procedures and guards on the machine. Any other safety devices or procedures due to local regulations should be should be retrofitted in accordance to these regulations and/or the EC Directive on the safety of machines.

Operator's position must always be readily accessible. Escape routes must always be kept clear and safety areas should be identified.

Safety Precautions

Safety should be a constant concern for everyone. Always be careful when working with this equipment. While normal safety precautions were taken in the design and manufacture of this equipment, there are some potential safety hazards.
Everyone involved with the operation and maintenance of this equipment should read and follow the instructions in this manual.
Operate the equipment only as stated in this manual. Incorrect use could cause damage to the equipment or personal injury.
It is the owner's responsibility to make certain that the operator reads and understands this manual before operating this equipment. It is also the owner's responsibility to make certain that the operator is a qualified and physically able individual, properly trained in the operation of this equipment.
Specific safety warning decals are located on the equipment near the immediate areas of potential hazards. These decals should not be removed or obliterated. Replace them if they become non-readable.

- ALWAYS keep safety shields and covers in place, except for servicing.
- ALWAYS operate equipment in daylight or with adequate working lights.
- Follow daily and weekly checklists, making sure hoses are tightly secured and bolts are tightened.
- ALWAYS watch and avoid holes or deep depressions.
- ALWAYS wear adequate eye protection when servicing the hydraulic system and battery.
- NEVER operate a poorly maintained machine.
- NEVER allow persons to operate this machine without proper instruction.
- NEVER put hands or feet under any part of the machine while it is running.
- NEVER attempt to make any adjustments or repairs to the machine while running. Repairs or maintenance should be performed by trained personnel only.
- NEVER work under the machine unless it is safely supported with stands, blocks or a hoist and blocks.
- NEVER touch hot parts of machine.

Parameter Settings

1342ZT Programming Instructions

PARAMETER	RANGE	VALUE	DESCRIPTION
Do this first	*****	****	**Perform a master reset before programming, see below**
290		5	Mode of operation. MUST SET THIS PARAMETER FIRST!
111	200-9900 rpm	0800	Maximum speed.
134	0-1	0	Soft start enable.
142	0-3	0	Speed status for the seam
161	0-1	1=CCW	Motor rotation
182	0-1	0	Reverse motor rotation.
240		052	FLIP/FLOP Input function setting.
270	0-5	1	External handwheel sensor configuration.
271	0-255	108	Number of angular degrees for stopping position other than a full heelback stop. NOTE: setting is based on a reflective tape length of 1/2".
272	020-255	0410	Drive ratio between motor pulley and handwheel pulley. If handwheel pulley is smaller than motor pulley, increase this value to slow down sewing head until measured speed matches speed set with parameter 111.
310		12	SELECT POWER TRANSISTOR
436		0	Use code "5913". This disables an input that was causing box to reset itself.

Front panel LED's:

LED 1: Off
LED 2: Off
LED 3: Off
LED 4: Off
LED 5: On
LED 6: On
LED 7: On
LED 8: Off

Programming Instructions:

1. Power on holding down the "P" button till "COD" is displayed.
2. Press ">>" once and enter the number "3112"
3. Press "E" once and "2.0.0." is displayed. This is a parameter.
4. Press "E" again and the value for parameter 200 is displayed.
5. With the value on the screen, adjust to desired setting.
6. Press "E" to enter value and continue with parameter setting.
7. Repeat for other parameters, press "P" once when complete.
8. **Run sewing head to save parameters before powering down**

To Perform Master Reset of Parameters:

1. Power on holding down the "P" button till "COD" is displayed.
2. Press ">>" once and enter the number "5913"
3. Press "E" twice and "093" is displayed.
4. Press "+" once, "094" is displayed.
5. Press "P" to exit programming mode with all default values.

Assembly Drawings & Parts Lists

The materials contained herein are confidential and proprietary information of Atlanta Attachment Company. In addition to any confidentiality and non-disclosure obligations that currently exist between you and Atlanta Attachment Company, your use of these materials serves as an acknowledgment of the confidential and proprietary nature of these materials and your duty not to make any unauthorized use or disclosure of these materials.

Atlanta PARTS DEPOT
One-Stop Shopping
For Expendable Replacement Parts for AAC & Other Bedding Equipment Suppliers
Toll Free: 1-866-885-5100
www.atlantapartsdepot.com • sales@atlantapartsdepot.com

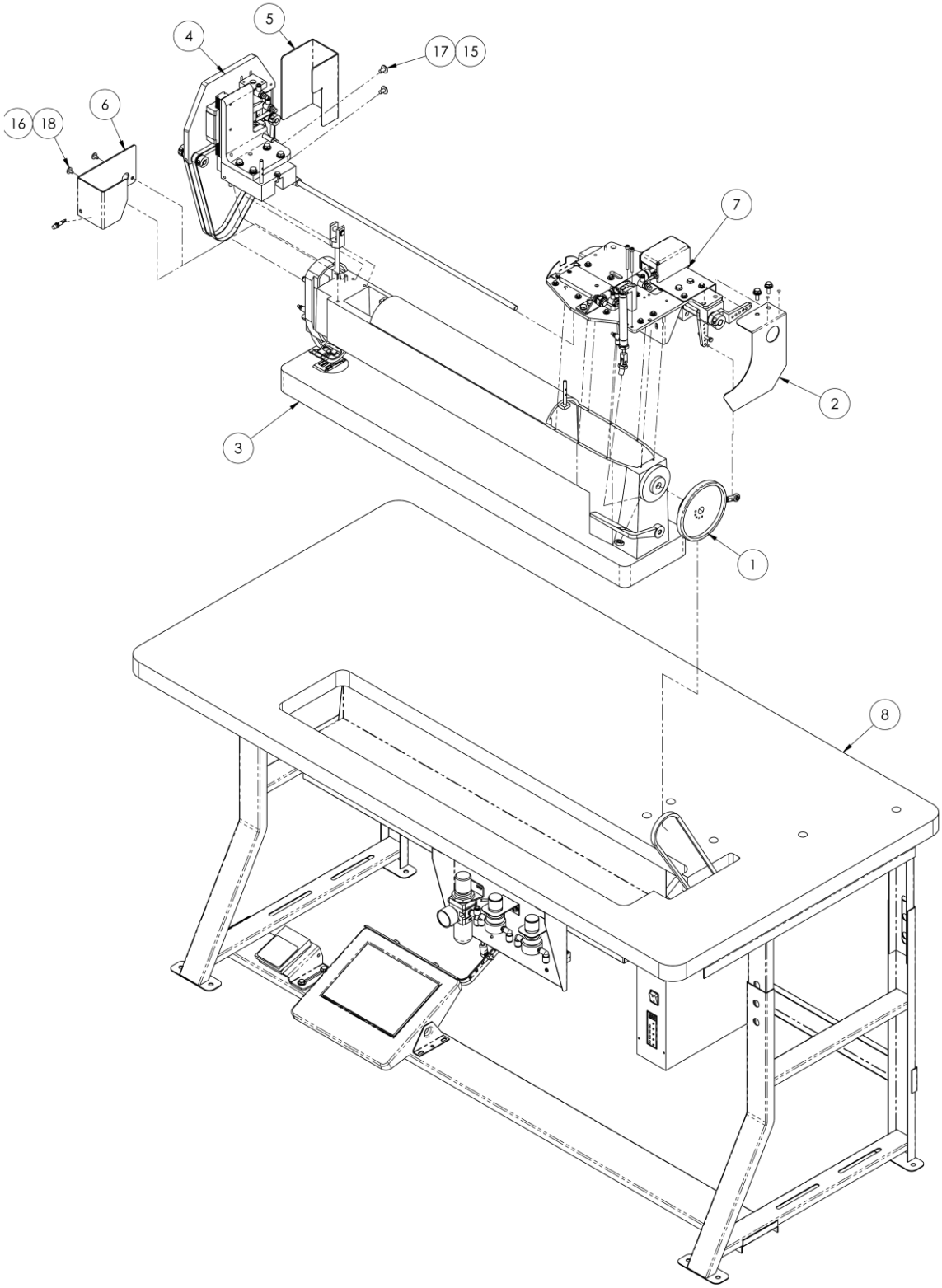
5
4
17
15
6
16
18
7
2
3
1
8

11342ZTC Long-Arm Label Sewer

AAC Drawing Number 9003173 Rev 3

NO	QTY	PART #	DESCRIPTION
1	1	1342010	ECCENTRIC DRIVE ARM ASSY
2	1	1342018	GUARD, V-BELT
3	1	1342Z-100A	SEWING PARTS & HEAD MOD.
4	1	1342Z-200	FEED BELT ASSEMBLY
5	1	1342Z-221	COVER,BELT,LEFT REAR
6	1	1342Z-223	GUARD,END
7	1	1342Z-400C	BELT DRIVE ASSEMBLY
8	1	1342Z-500	STAND ASSEMBLY
*10	AR	1342ZT-LAB	LABELS
*11	AR	1342ZT-PD	PNEUMATIC DIAGRAM
*12	AR	1342ZT-WD	WIRING DIAGRAM
*13	1	1342ZTC-PAR1	PARAMETER SETTINGS,F/F
13	AR	FFLP24VA	CABLE, LAMP AMBER 24 V
*13	10	SN135X1722	NEEDLE,SIZE 22
15	2	SSBC01032	1/4-20 X 1/2 BUT CAP SC
16	2	SSBC98024	10-32 X 3/8 BUTTON CAP SC
17	2	WWFS1/4	WASHER,FLAT,SAE,1/4
18	2	WWFS10	WASHER, FLAT, #10, SAE

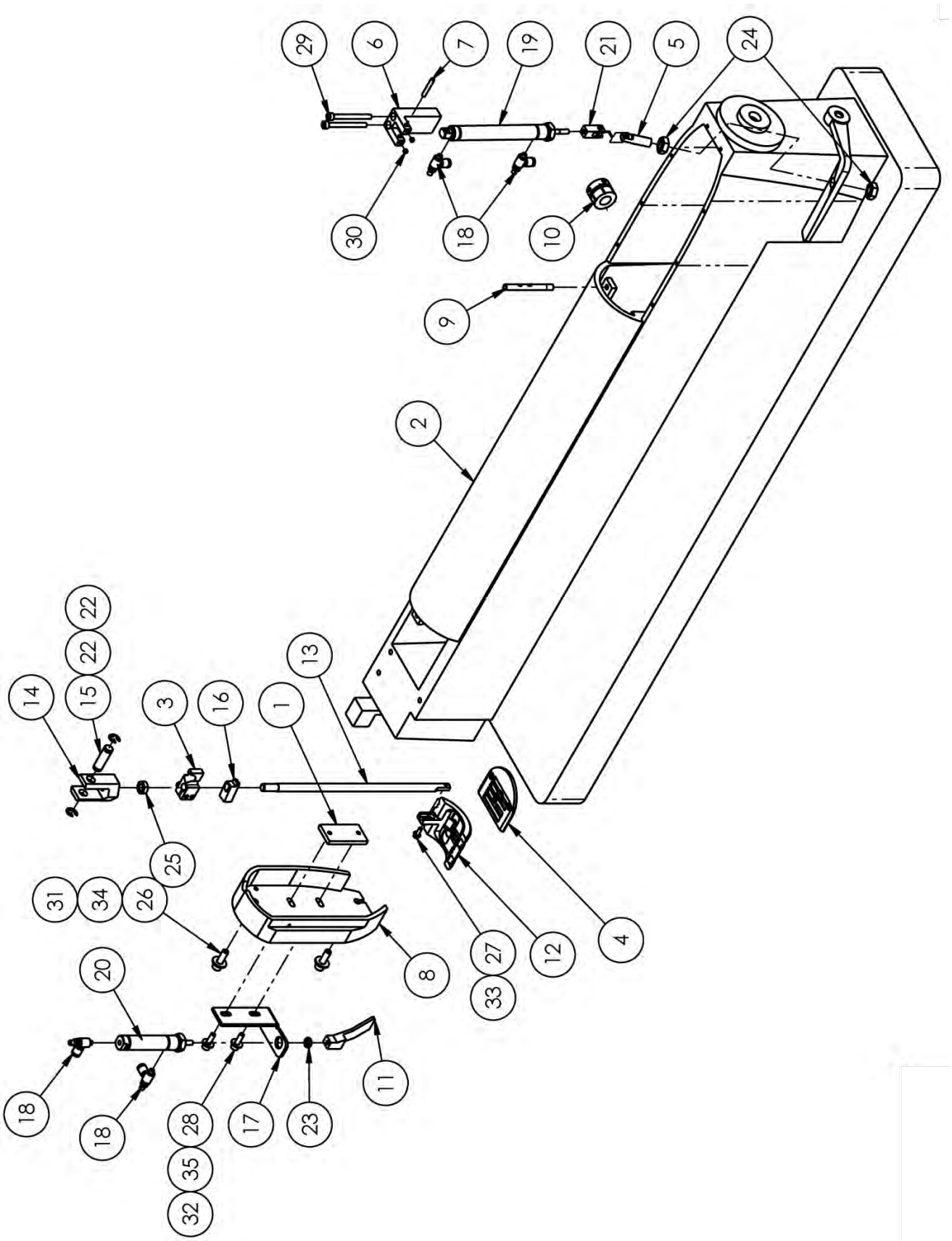
29
6
7
19
21
5
24
30
18
10
9
2
22
22
14
15
3
16
1
13
25
31
34
26
8
27
12
4
33
20
18
18
28
35
32
17
23
11

1342Z-100A Sewing Head Assembly

AAC Drawing Number 9003171 Rev 2

NO.	QTY	PART #	DESCRIPTION
1	1	0411-3907	PLATE,NUT,10-32@1.50 CTC
2	1	1341-30M	SEWING HEAD, MOD
3	1	1342001	HOLDER, PRESSER BAR
4	1	1342017	FEED PLATE, MODIFIED
5	1	1342Z-102	STUD,DIRECTION CHANGE
6	1	1342Z-103	BRACKET,CYLINDER
7	1	1342Z-104	SHAFT,5/32 X 1.00 L
8	1	1342Z-109	COVER,FRONT,MODIFIED
9	1	1342Z-115	THREAD EYELET
10	1	1342Z-119A	COLLAR, TAPE
11	1	1342Z-122	FOOT PLUNGER
12	1	1342Z-123	FOOT,PRESSER
13	1	1342Z-124	BAR,PRESSER
14	1	1342Z-125	CLEVIS,PRESSER BAR
15	1	1342Z-126	PIN,CLEVIS
16	1	1342Z-127	LEVER,TENSION RELEASE
17	1	1352Z-111	BRACKET,CYLINDER
18	4	AA198RA510	FLOW CONTROL,5/32X10-32
19	1	AAC8DP-3	CYLINDER,AIR,DA
20	1	AACNR021D	CYLINDER, AIR, NR, MAGNET
21	1	AAFCT-8	CLEVIS,AIR CYL, 10-32
22	2	MM8407A134	RING,RETAINING,"E",3/8"
23	1	NNH10-32	HEX-NUT 10-32 REG.
24	2	NNJ3/8-16	3/8-16 JAM NUT
25	1	NNJ5/16-24	NUT,JAM,5/16-24
26	2	SSSC01048	1/4-20 X 3/4" SOC CAP SC
27	1	SSSC85024	6-40 X 3/8 SOC CAP SC
28	2	SSSC98040	10-32 X 5/8 SOC CAP
29	2	SSSC98128	10-32 X 2 SOC CAP
30	2	SSSS90008	8-32X1/8 SET SCREW
31	2	WWFS1/4	WASHER,FLAT,SAE,1/4
32	2	WWFS10	WASHER, FLAT, #10, SAE
33	1	WWFS6	WASHER, FLAT, #6
34	2	WWL1/4	WASHER,LOCK,1/4
35	2	WWL10	WASHER,LOCK,#10,S/S

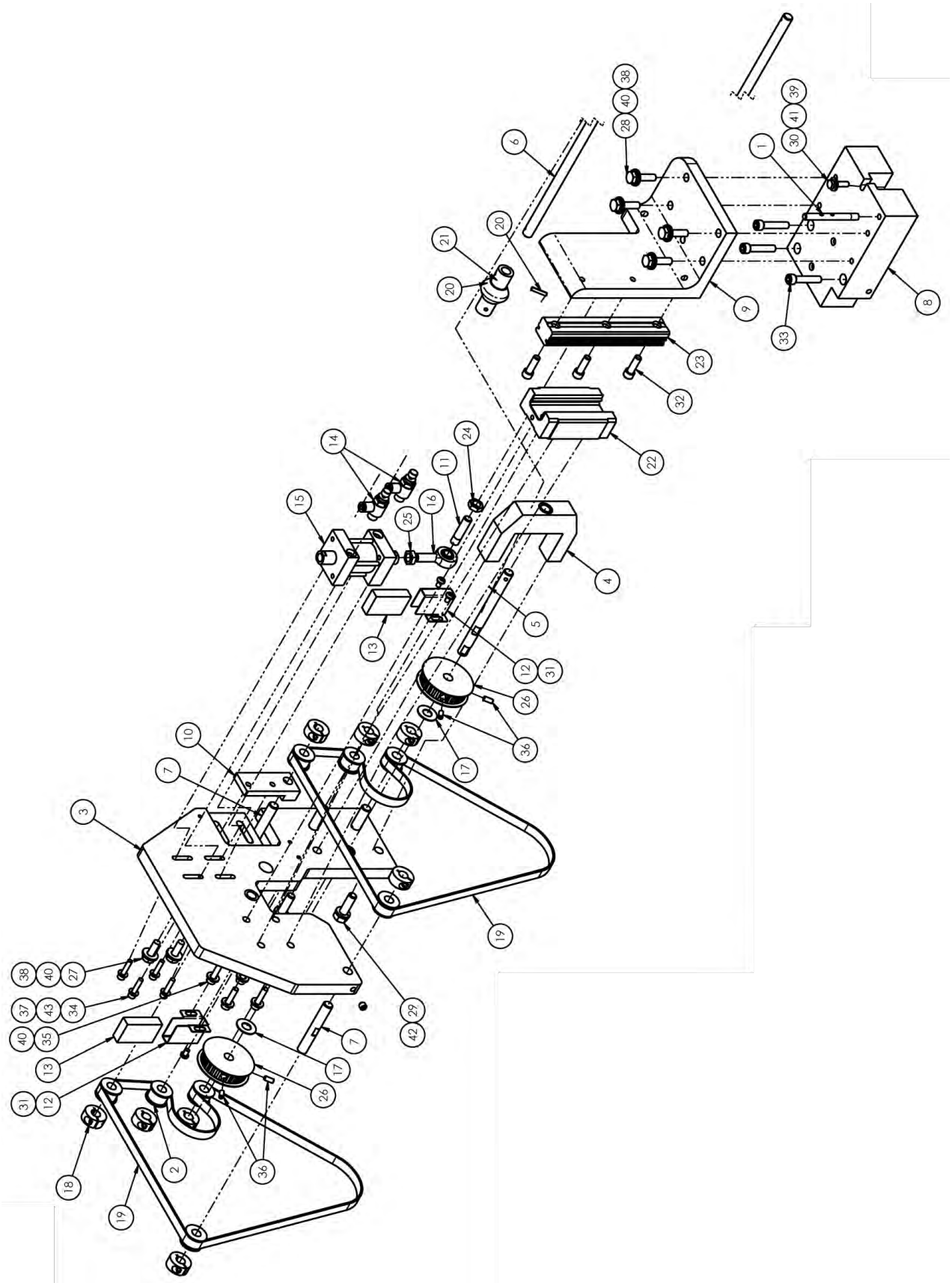
38
40
28
6
39
41
30
1
21
20
20
9
8
33
23
32
22
14
24
11
15
16
25
4
5
13
12
31
26
36
17
10
7
3
19
38
40
27
37
43
34
40
35
13
31
12
18
2
36
26
17
7
29
42
19

1342Z-200 Feed Belt Assembly

AAC Drawing Number 9003166 Rev 4

NO.	QTY	PART #	DESCRIPTION
1	1	1342Z-115	THREAD EYELET
2	8	1342Z-201	ROLLER,DELRIN.TOP BELT FD
3	1	1342Z-202	PLATE,BELT
4	1	1342Z-203	BEARING BLOCK
5	1	1342Z-204	DRIVE SHAFT
6	1	1342Z-205	DRIVE SHAFT
7	4	1342Z-210	SHAFT,IDLER,60C
8	1	1342Z-215	BLOCK,MOUNTING
9	1	1342Z-216	ANGLE,MOUNTING
10	1	1342Z-217	BAR,TENSIONER
11	1	1342Z-219	STUD,BELT LIFT
12	2	1342Z-220	HOLDER,OIL PAD
13	2	236957	FELT,OIL PAD
14	2	AA198RA508	FLOW CONTROL,5/32 X 1/8"
15	1	AACFSD091	CYLINDER,AIR,SQUARE
16	1	AT604-03	ROD END, SPHERICAL .5/16ID X 5/16-24
17	2	BBTRA613	WASHER,THRUST,STL, .375B
18	8	CCCL6F	CLAMP COLLAR- 3/8
19	2	GG356XL037U	BELT,GEAR,KEVLAR CORE,URE
20	2	IIS008X040	ROLL PIN, 1/8 X 5/8
21	1	MM300106CM	U-JOINT, MODIFIED,3/8B
22	1	MMAGH25CAN	LINEAR BEARING
23	1	MMAGR25139N	RAIL LINEAR AG
24	1	NNH5/16-18	5/16-18 HEX NUT
25	1	NNH5/16-24	5/16-24 HEX NUT
26	2	PP30XLB03738M1	PULLEY, 1/5P, 30T, 3/8 B
27	2	SSHC01048	1/4-20 X 3/4 HEX CAP
28	4	SSHC01064	1/4-20 X 1 HHCS
29	2	SSHC10064	5/16-18 X 1 HHCS
30	1	SSHC95048	SCREW, HEX CAP
31	4	SSPS90016	#8-32 X 1/4 LG PAN HD
32	3	SSSC01048	1/4-20 X 3/4" SOC CAP SC
33	3	SSSC01080	1/4-20X1-1/4, SOC CAP
34	4	SSSC90048	#8-32 X 3/4 SOC CAP SC
35	4	SSSCM5X20	M5-0.8X20,SCREW,SOCKET CA
36	4	SSSS90024	SCREW,SKT SET,FLAT POINT
37	4	WWF8	WASHER, FLAT, #8
38	6	WWFS1/4	WASHER,FLAT,SAE,1/4
39	1	WWFS10	WASHER, FLAT, #10, SAE
40	10	WWL1/4	WASHER,LOCK,1/4
41	1	WWL10	WASHER,LOCK,#10,S/S
42	2	WWL5/16	WASHER, LOCK, 5/16
43	4	WWL8	WASHER,LOCK,#8

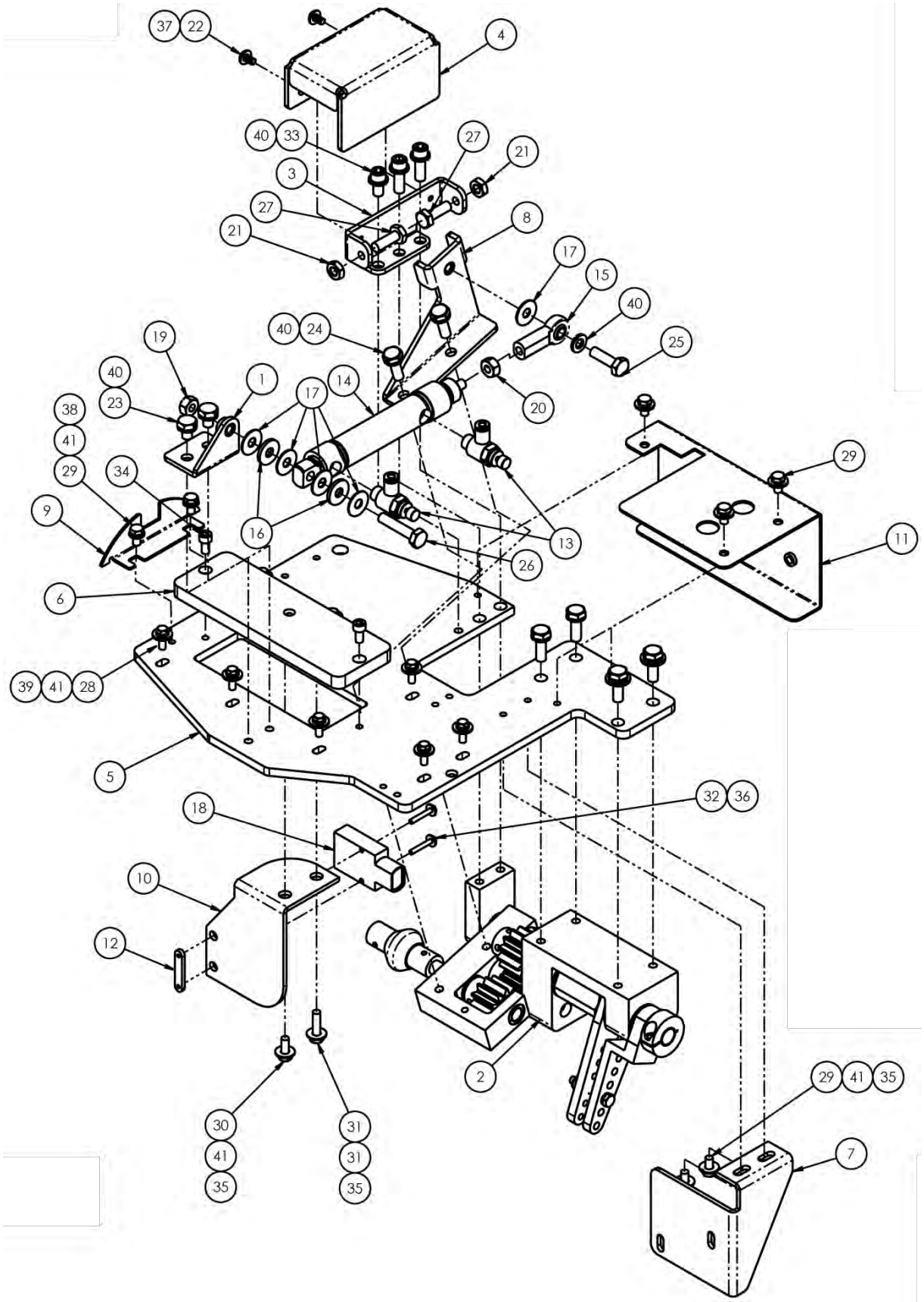
37
22
4
40
33
27
21
3
27
21
8
17
15
40
25
40
24
19
40
23
1
17
14
20
38
41
29
34
9
16
13
26
29
11
6
39
41
28
5
32
36
18
10
12
2
29
41
35
7
30
41
35
31
31
35

1342Z-400C Belt Drive Assembly

AAC Drawing Number 9003165 Rev 2

NO.	QTY	PART #	DESCRIPTION
1	1	1278-6310F	MOUNT,CYLINDER
2	1	1342012	DRIVE ASSY, 1342ZT
3	1	1342019	STROKE ADJ. BRACKET
4	1	1342020	GUARD,CYLINDER LINKAGE
5	1	1342Z-404A	PLATE,MOUNTING
6	1	1342Z-404B	CAP,OIL,TOP PLATE
7	1	1342Z-407A	BRACKET,SUPPORT
8	1	1342Z-413	CYL BRACKET,PIVOT ARM
9	1	1342Z-415	COVER
10	1	1342Z-416	BRACKET,SENSOR
11	1	1342Z-417	GUARD,GEAR
12	1	1975-412A	PLATE,NUT,4-40,.95CTC
13	2	AA198RA508	FLOW CONTROL,5/32 X 1/8"
14	1	AAC7DP-1.5	CYL.,AIR,DA 3/4 BORE,1.5S
15	1	BBAW-4	BEARING,ROD END,FEMALE
16	2	BBNTA411	BEARING,THRUST,.250B
17	5	BBTRA411	WASHER,THRUST,STEEL
18	1	FFSM312LVQ	EYE,ELECTRIC,10-30VDC
19	1	NNH1/4-20	NUT,HEX,1/4-20
20	1	NNH1_4-28	NUT,HEX,1/4-28
21	2	NNJ1/4-28	NUT, HEX, JAM, 1/4-28
22	2	SSBC90020	8-32X3/8 BUTTON CAP
23	2	SSHC01024	1/4-20 X 3/8 HHCS
24	2	SSHC01048	1/4-20 X 3/4 HEX CAP
25	1	SSHC01056	1/4-20 X 7/8 HEX CAP
26	1	SSHC01080	1/4-20 X 1-1/4 HHCS
27	2	SSHC05048	1/4-28 X 3/4 HEX CAP
28	8	SSHC90032	#8-32 X 1/2 HEX CAP
29	7	SSHC98024	10-32 X 3/8 HEX CAP
30	1	SSHC98032	10-32X1/2 HEX HD
31	1	SSHC98048	SCREW, HEX CAP #10-32X.75
32	2	SSPS70048	4-40 X 3/4 PAN HD SLOTTED
33	1	SSSC01032	1/4-20X1/2 SOC CAP
34	2	SSSC98024	10-32 X 3/8 SOC CAP
35	4	WWF10	WASHER, FLAT, #10, COM
36	2	WWF4	WASHER, FLAT, #4
37	2	WWF8	WASHER, FLAT, #8
38	2	WWFM5	WASHER, FLAT, M5 I.D.
39	11	WWFS10	WASHER, FLAT, #10, SAE
40	6	WWL1/4	WASHER,LOCK,1/4
41	17	WWL10	WASHER,LOCK,#10,S/S

Page 21

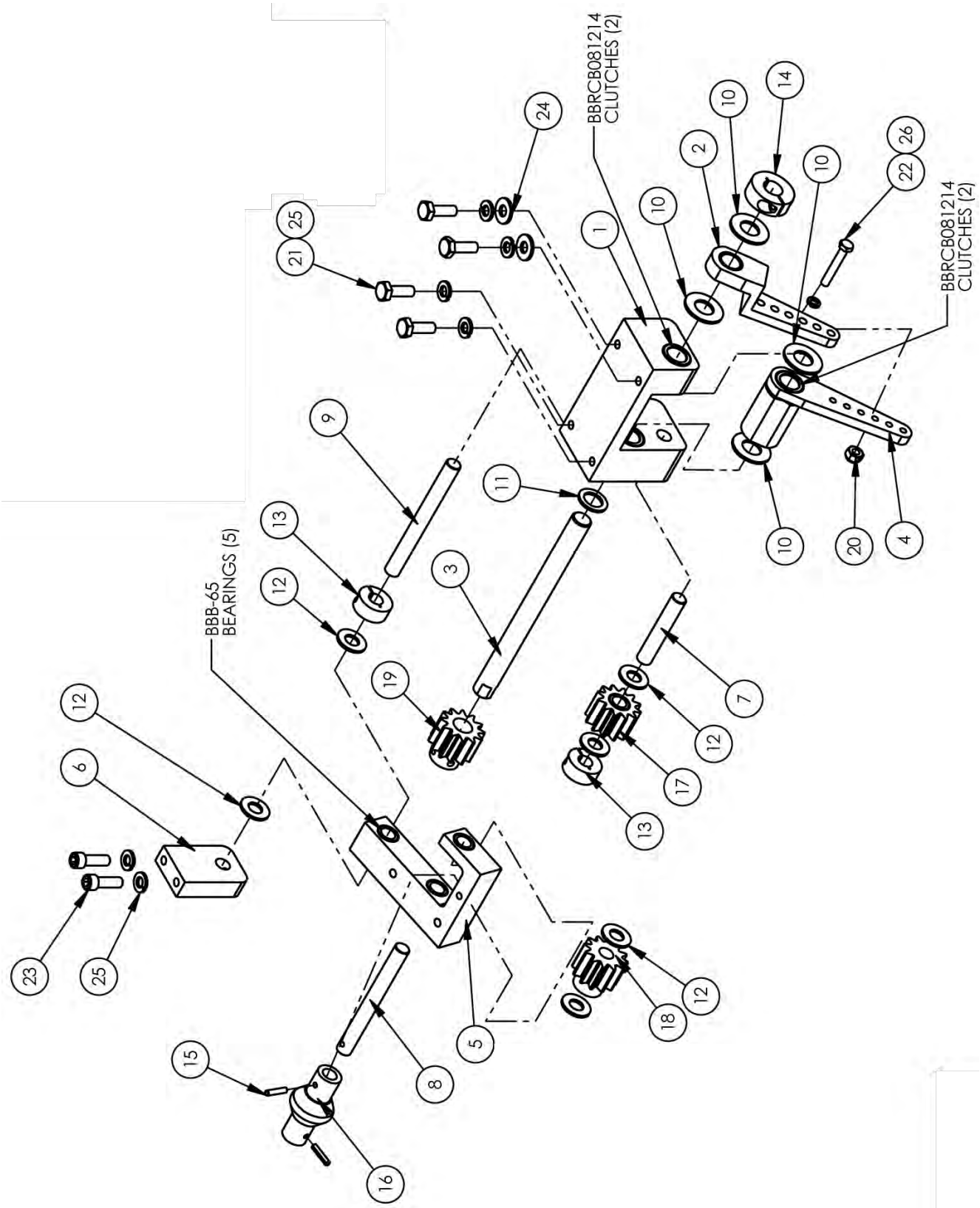
BBRCB081214
CLUTCHES (2)
BBRCB081214
CLUTCHES (2)
BBB-65
BEARINGS (5)
1
2
3
4
5
6
7
8
9
10
11
12
13
14
15
16
17
18
19
20
21
22
23
24
25
26

1342012 Drive Sub-Assembly

AAC Drawing Number 1342012 Rev 1

NO.	QTY	PART #	DESCRIPTION
1	1	1342013	MOUNT,DRIVE LEVER
2	1	1342014	DRIVE ARM, OUTSIDE
3	1	1342016	SHAFT, FLAT,60C,.50D
4	1	1342Z-403	DRIVE LEVER ASBLY
5	1	1342Z-406	ARM,PIVOT,CHANGE GEAR
6	1	1342Z-408	MOUNT,CHANGE GEAR SHAFT
7	1	1342Z-410	SHAFT,IDLER,60C,.38D
8	1	1342Z-411	SHAFT,DRIVE,60C,.38D
9	1	1342Z-412	SHAFT,PIVOT,60C,038D
10	4	BBTT1001	WASHER,THRUST,BRONZE
11	1	BBTT706	BEARING,BRONZE,OD.75X.5 .
12	6	BBTT710-01	WASHER, THRUST, BRNZ.
13	2	CCCL6F	CLAMP COLLAR- 3/8
14	1	CCCL8F	CLAMP COLLAR- 1/2
15	2	IIS008X040	ROLL PIN, 1/8 X 5/8
16	1	MM300106CM	U-JOINT, MODIFIED,3/8B
17	1	MMGNSS1212M	GEAR, CHANGE
18	1	MMGNSS1212M1	GEAR, CHANGE
19	1	MMGNSS1212M2	GEAR, DRIVE
20	1	NNE10-32	NUT,ELASTIC LOCK
21	4	SSHC01048	1/4-20 X 3/4 HEX CAP
22	1	SSHC98080	#10-32 X 1-1/4 HEX CAP
23	2	SSSC01048	1/4-20 X 3/4" SOC CAP SC
24	2	WWFS1/4	WASHER,FLAT,SAE,1/4
25	6	WWL1/4	WASHER,LOCK,1/4
26	1	WWL10	WASHER,LOCK,#10,S/S

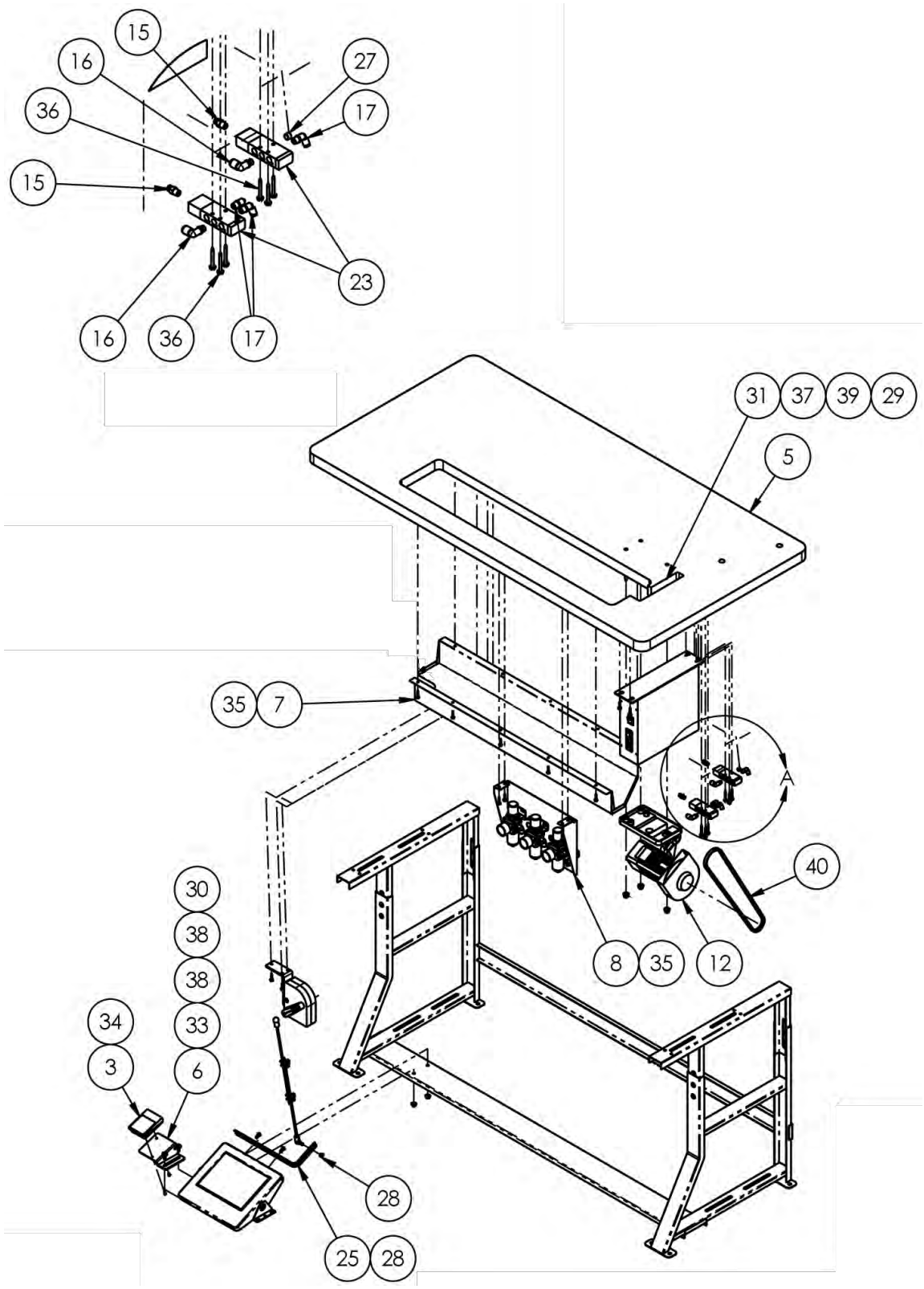
15
16
27
17
36
15
23
16
36
17
31
37
39
29
5
35
7
A
40
30
38
38
33
34
3
6
8
35
12
28
25
28

342Z-500 Stand Assembly

AAC Drawing Number 9003172 Rev 3

NO.	QTY	PART #	DESCRIPTION	
1	1	0211-701D	CABLE,I/O	
2	1	0211-702C	CABLE,POS.SENSOR,3',EFKA	
3	1	1278-6161	FOOT SWITCH MODIFICATION	
4	1	12788-503C	CABLE,REVERSING SWITCH	
5	1	1341-30-TSM	TABLE & STAND,MOD	
6	1	1342Z-501	PEDAL,MOUNTING PLATE	
7	1	1342Z-503	MODIFIED DRIP PAN	
8	1	1342Z-550	PANEL ASSEMBLY	Page 24
9	1	1342ZT-LAB	LABELS	
10	1	1342ZT-PD	PNEUMATIC DIAGRAM	Page 26
11	1	1342ZT-WD	WIRING DIAGRAM	Page 27
12	1	4059-DC1500MM	MOTOR MOUNTING KIT	
13	1	4059-DC50	MOTOR, LOW SPD, HIGH TORQ	
14	10	AAF1_8	CLAMP,PLASTIC 1/8	
15	2	AAQMC-5-8	QU. MALE CONN 5/32X1/8	
16	2	AAQME-4-8	ELBOW,QUICK MALE,1/4X1/8	
17	3	AAQME-5-8	QUICK MALE ELBOW	
18	1	AAQPR-5-4	QUICK PLUG-IN REDUCER	
19	3	AAQUY-5-4	Y UNION, 5/32X1/4	
20	4	AAQUY-5-5	QUICK UNION Y, 5/32	
21	1	AATP4-1	1/4" OD POLYURETHANE	
22	1	AATP5/32	TUBING, 5/32 OD	
23	2	AAV125B	PILOT VALVE	
24	1	EEFE-RR2	TAPE,REFLECTIVE,1" WIDE	
25	1	K-344P	TREADLE EXTENSION	
26	1	MM100-1/8	DOOR TRIM-BLACK	
27	1	MM4554K11	PLUG, 1/8" PIPE	
28	3	NNH1/4-20	NUT,HEX,1/4-20	
29	3	NNH5/16-18	5/16-18 HEX NUT	
30	2	NNK1/4-20	NUT,HEX,KEP,1/4-20,W/LOCK	
31	3	ssbk10160	BOLT, CARRAGE, 5/16X2.5	
32	2	SSHC01032	1/4-20 X 1/2 HHCS	
33	2	SSHC01048	1/4-20 X 3/4 HEX CAP	
34	2	SSPS80024	#6-32 X 3/8 LG PAN HD	
35	21	SSZH#10064	SCREW,SHT.METAL HEX 10	
36	6	SSZH#6096	SCREW,SHT.METAL HEX 6	
37	3	WWF5/16S	WASHER,FLAT,5/16 NARROW	
38	4	WWFS1/4	WASHER,FLAT,SAE,1/4	
39	3	WWL5/16	WASHER, LOCK, 5/16	
40	1	zx3840	V-BELT,3/8 X 40	

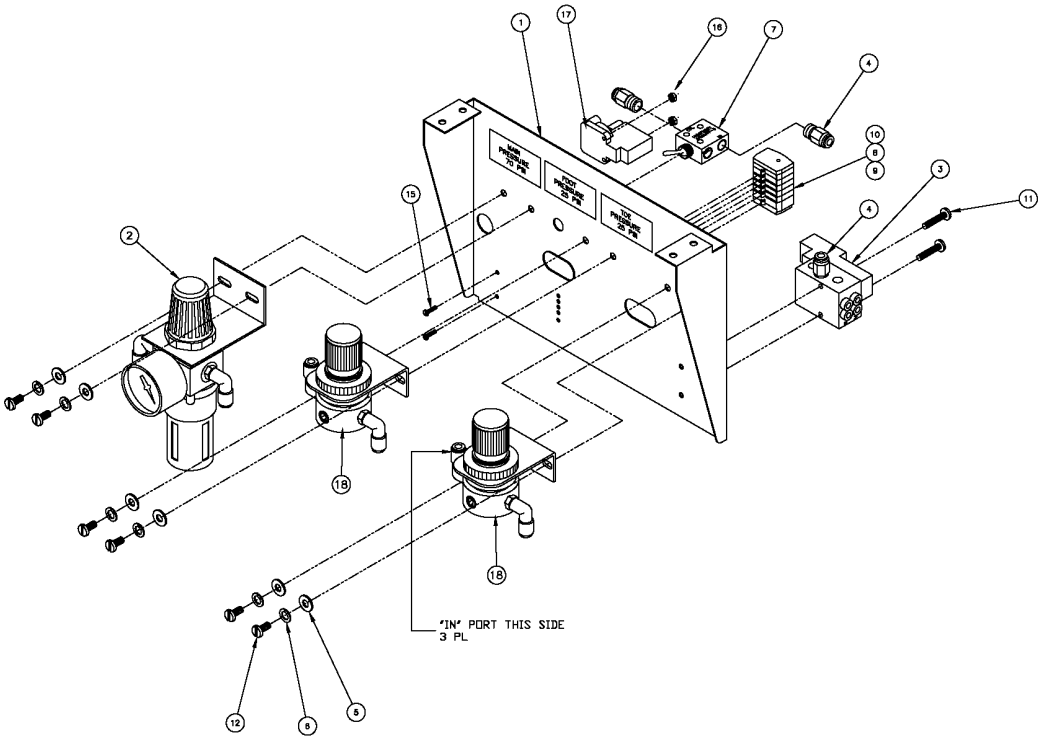

1342Z-550 Panel Assembly

AAC Drawing Number 192663C Rev 3

NO.	QTY	PART #	DESCRIPTION
1	1	1342Z-502	Pneumatic Panel
2	1	AA198-5102	Filter/Regulator
3	1	AAE211P-2	Solenoid
4	3	AAQMC-4-8	Quick Male Conn.
5	6	WWFS10	Flat Washer
6	6	WWL10	Lock Washer
7	1	AAVMJTV-3	Toggle Valve
8	5	FF264-311	Wago, Single
9	1	FF264-341	Wago, Dual
10	1	FF264-371	Wago, End Cap
11	2	SSPS80080	Screw, Pan Head
12	6	SSPS98024	Screw, Pan Head
13	AR	1342ZT-PD	Pnuematic Diagram
14	AR	1342ZT-WD	Wiring Diagram
15	2	SSPS70032	Pan Slotted Screw
16	2	NNK4-40	Kep Nut
17	1	AAVF51FM1B	Air/Elect Switch
18	2	26308	Regulator Assy

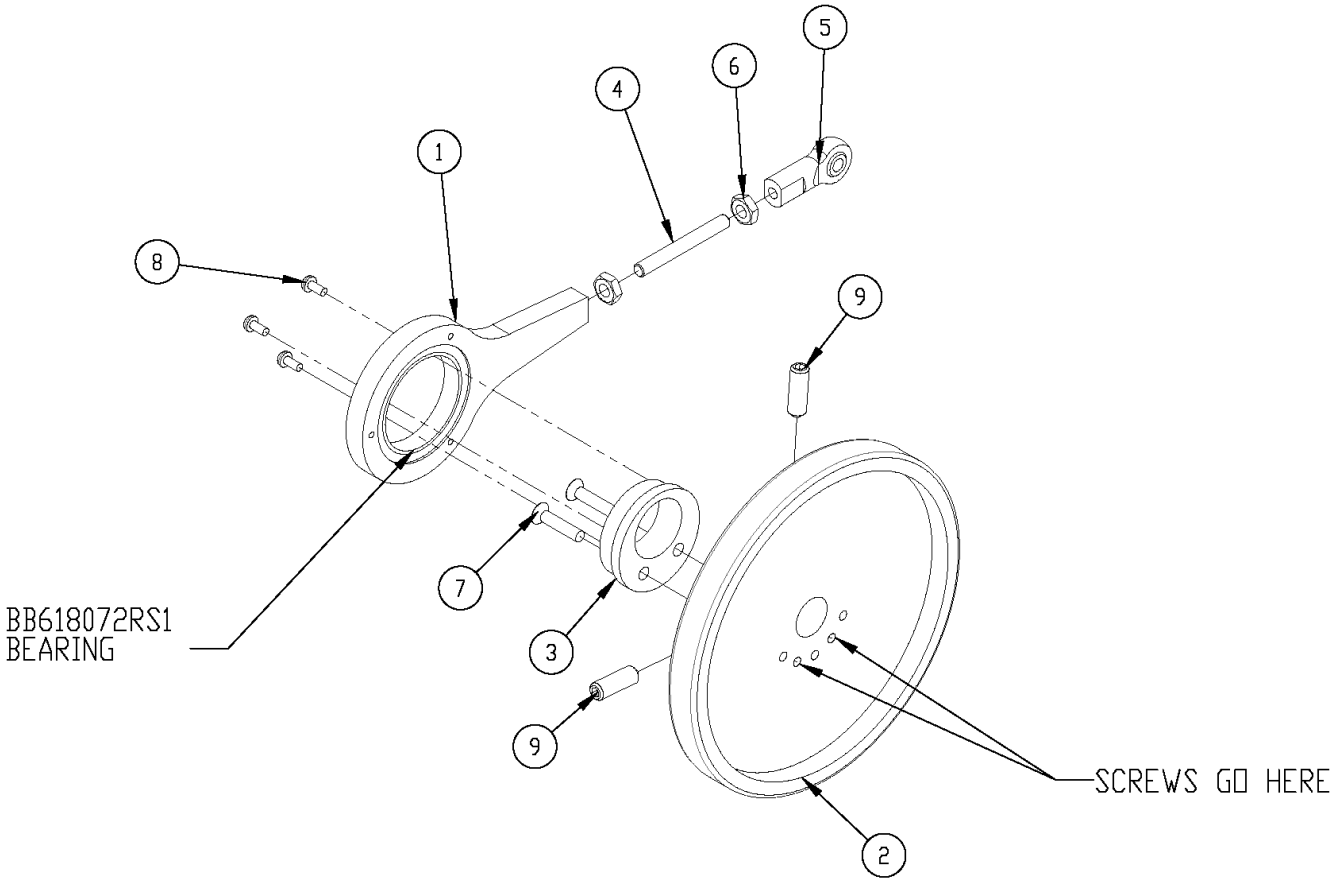

1342010 Eccentric Assembly

AAC Drawing Number 1342010 Rev 0

NO.	QTY	PART #	DESCRIPTION
1	1	1342008	LINK, ECCENTRIC
2	1	1342009	HANDWHEEL SGL GROOVE
3	1	1342011	ECCENTRIC, W/SCREWS
4	1	1342Z-304	THREADED ROD, 10-32X1.63
5	1	BBAW-3Z	BRG,ROD END,F, 10-32
6	2	NNH10-32	HEX-NUT 10-32 REG.
7	2	SSFC90048	8-32 X 3/4 FLAT AL CAP
8	3	SSPS70016	4-40 X 1/2 PAN HD SLOTTED
9	2	SSS01048	1/4-20 X 3/4

1342ZT-PD Pneumatic Diagram

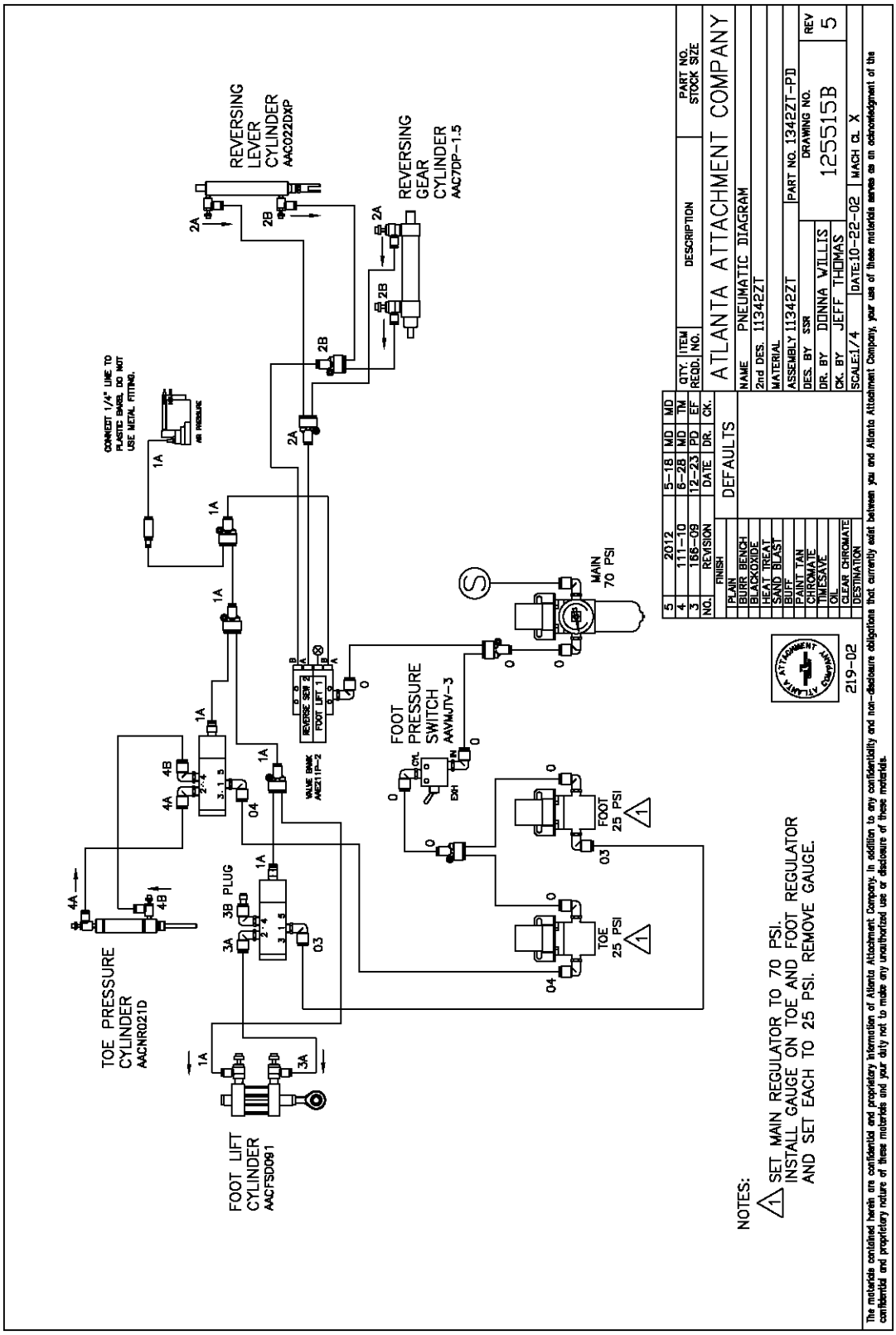

1342ZT-WD Wiring Diagram

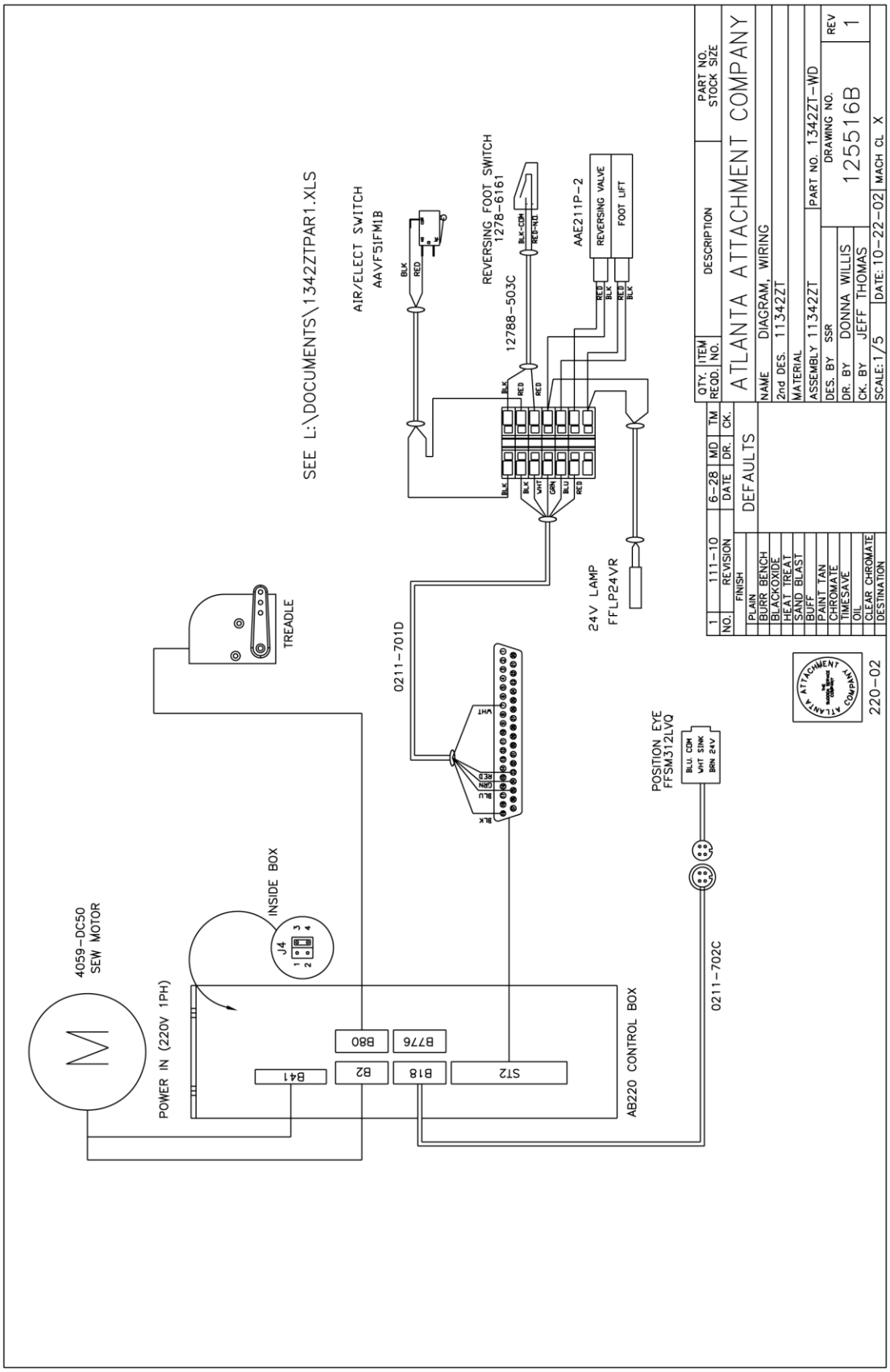

Atlanta Attachment Company (AAC) Statement of Warranty

Manufactured Products

Atlanta Attachment Company warrants manufactured products to be free from defects in material and workmanship for a period of eight hundred (800) hours of operation or one hundred (100) days whichever comes first. Atlanta Attachment Company warrants all electrical components of the Serial Bus System to be free from defects in material or workmanship for a period of thirty six (36) months.

Terms and Conditions:

- AAC Limited Warranty becomes effective on the date of shipment.
- AAC Warranty claims may be made by telephone, letter, fax or e-mail. All verbal claims must be confirmed in writing.
- AAC reserves the right to require the return of all claimed defective parts with a completed warranty claim form.
- AAC will, at its option, repair or replace the defective machine and parts upon return to AAC.
- AAC reserves the right to make the final decision on all warranty coverage questions.
- AAC warranty periods as stated are for eight hundred (800) hours or one hundred (100) days whichever comes first.
- AAC guarantees satisfactory operation of the machines on the basis of generally accepted industry standards, contingent upon proper application, installation and maintenance.
- AAC Limited Warranty may not be changed or modified and is not subject to any other warranty expressed or implied by any other agent, dealer, or distributor unless approved in writing by AAC in advance of any claim being filed.

What Is Covered

- Electrical components that are not included within the Serial Bus System that fail due to defects in material or workmanship, which are manufactured by AAC are covered for a period of eight hundred (800) hours.
- Mechanical parts or components that fail due to defects in material or workmanship, which are manufactured by AAC.
- Purchased items (sewing heads, motors, etc.) will be covered by the manufacturers (OEM) warranty.
- AAC will assist in the procurement and handling of the manufacturers (OEM) claim.

What Is Not Covered

- Parts that fail due to improper usage, lack of proper maintenance, lubrication and/or modification.
- Damages caused by; improper freight handling, accidents, fire and issues resulting from unauthorized service and/or personnel, improper electrical, plumbing connections.
- Normal wear of machine and parts such as Conveyor belts, "O" rings, gauge parts, cutters, needles, etc.
- Machine adjustments related to sewing applications and/or general machine operation.
- Charges for field service.
- Loss of time, potential revenue, and/or profits.
- Personal injury and/or property damage resulting from the operation of this equipment.

Declaración de Garantía

Productos Manufacturados

Atlanta Attachment Company garantiza que los productos de fabricación son libres de defectos de mate-rial y de mano de obra durante un periodo de ochocientos (800) horas de operación o cien (100) días cual llegue primero. Atlanta Attachment Company garantiza que todos los componentes del Serial bus son libres de defectos de material y de mano de obra durante un periodo de treinta y seis (36) meses.

Términos y Condiciones:

- La Garantía Limitada de AAC entra en efecto el día de transporte.
- Reclamos de la Garantía de AAC pueden ser realizados por teléfono, carta, fax o correo electrónico. Todo reclamo verbal tiene que ser confirmado vía escrito.
- AAC reserva el derecho para exigir el retorno de cada pieza defectuosa con un formulario de reclamo de garantía.
- AAC va, según su criterio, reparar o reemplazar las máquinas o piezas defectuosas devueltas para AAC.
- AAC reserva el derecho para tomar la decisión final sobre toda cuestión de garantía.
- Las garantías de AAC tiene una validez de ochocientas (800) horas o cien (100) días cual llega primero.
- AAC garantiza la operación satisfactoria de sus máquinas en base de las normas aceptadas de la industria siempre y cuando se instale use y mantenga de forma apropiada.
- La garantía de AAC no puede ser cambiada o modificada y no está sujeto a cualquier otra garantía implicada por otro agente o distribuidor al menos que sea autorizado por AAC antes de cualquier reclamo.

Lo Que Está Garantizado

- Componentes eléctricos que no están incluidos dentro del sistema Serial Bus que fallen por defectos de materiales o de fabricación que han sido manufacturados por AAC son garantizados por un período de ochocientas (800) horas.
- Componentes mecánicos que fallen por defectos de materiales o de fabricación que han sido manu-facturados por AAC son garantizados por un periodo de ochocientas (800) horas.
- Componentes comprados (Motores, Cabezales), son protegidos bajo de la garantía del fabricante.
- AAC asistirá con el manejo de todo reclamo de garantía bajo la garantía del fabricante.

Lo Que No Está Garantizado

- Falla de repuestos al raíz de uso incorrecto, falta de mantenimiento, lubricación o modificación.
- Daños ocurridos a raíz de mal transporte, accidentes, incendios o cualquier daño como resultado de servicio por personas no autorizados o instalaciones incorrectas de conexiones eléctricas o neumáticas.
- Desgaste normal de piezas como correas, anillos de goma, cuchillas, agujas, etc.
- Ajustes de la máquina en relación a las aplicaciones de costura y/o la operación en general de la máquina.
- Gastos de Reparaciones fuera de las instalaciones de AAC
- Pérdida de tiempo, ingresos potenciales, y/o ganancias.
- Daños personales y/o daños a la propiedad como resultado de la operación de este equipo.
- .

Atlanta Attachment Company
362 Industrial Park Drive
Lawrenceville, GA 30046
770-963-7369
www.atlatt.com

Printed in the USA