Model **1335MG**

Revision 7.1 Updated May27, 2016

Technical Manual & Parts Lists

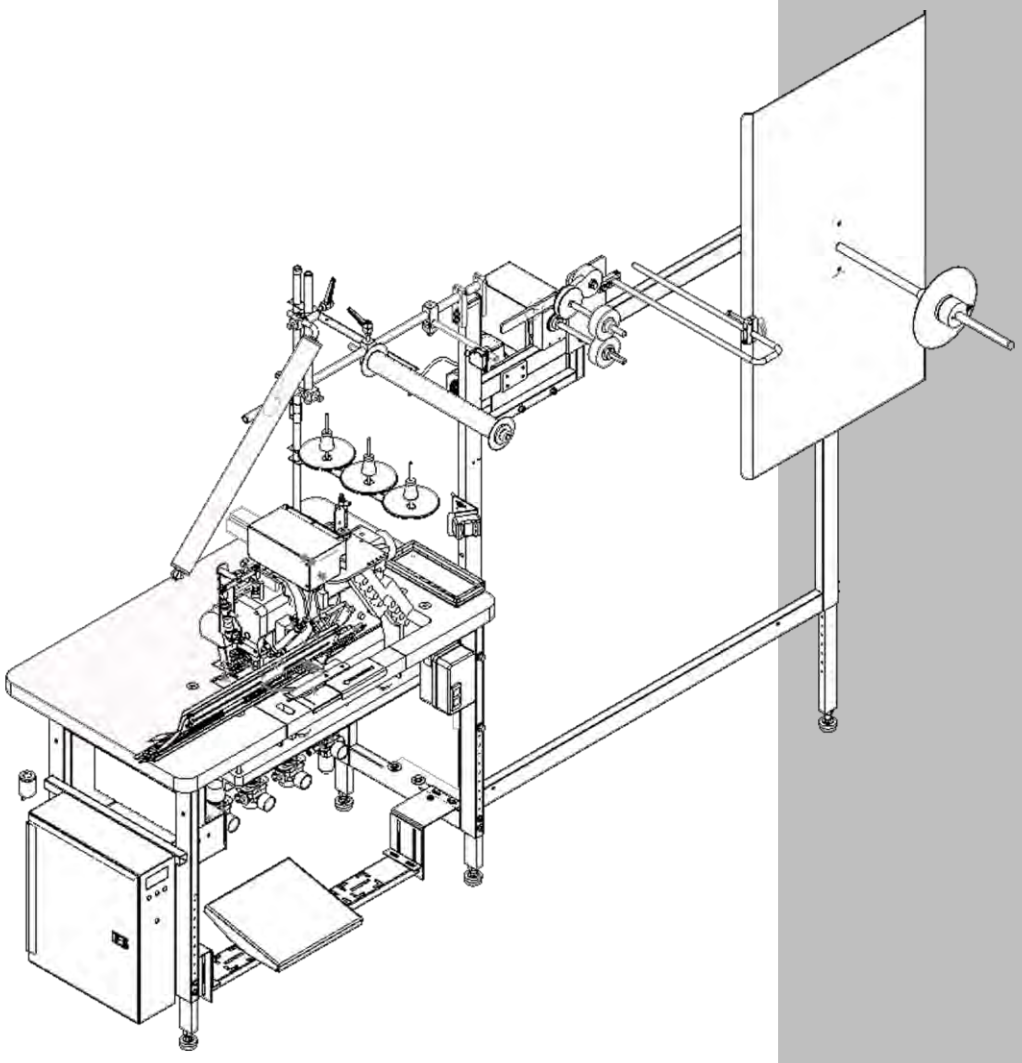

Atlanta Attachment Company

362 Industrial Park Drive

Lawrenceville, GA 30046

770-963-7369 • www.atlatt.com

ATLANTA ATTACHMENT COMPANY, INC.

Confidential and Proprietary Information

The materials contained herein are confidential and proprietary information of Atlanta Attachment Company. In addition to any confidentiality and non-disclosure obligations that currently exist between you and Atlanta Attachment Company, your use of these materials serves as an acknowledgment of the confidential and proprietary nature of these materials and your duty not to make any unauthorized use or disclosure of these materials.

All materials contained herein are additionally protected by United States Copyright law and may not be used, disclosed, reproduced, distributed, published or sold without the express written consent of Atlanta Attachment Company, which consent may be withheld in Atlanta Attachment Company's sole discretion. You may not alter or remove any copyright, trademark or other notice from copies of these materials.

IMPORTANT

It is important to read and understand the information contained within this manual before attempting to operate the machine. Atlanta Attachment Co., Inc. shall not be held liable for damage resulting from misuse of the information presented within, and reserves the right to change the information contained within, without prior notification.

Contents

Important Safety Instruction 1
Safety Equipment on the Machines 3
Protective Eyewear 4
Important Notices 5
Maintenance 7
Repair 8
A Word to the End User 9
Safety Precautions 9
1.- INSTALLATION MANUAL 10
1.2.- Parts and Components 10
1.2. - Technical Data 11
1.3 Installation & Set Up 12
2.- OPERATING MANUAL 13
2.1.- Individual Components 13
2.1.1.- Foot Pedal 13
2.1.2.- Wipe Switch 13
2.1.3.EdgeGuide/Panel Tension Assembly 13
2.1.4.- Efka Motor 14
2.1.5.- Control Box 14
2.2.- Changing the Needle 15
2.3 Threading 16
2.3.1.- 1335MG (Yamato 2002) 16
2.3.2.- 1335MH (Singer 300UX6) 24
2.4.- Loading Material 31
1.- Border or Gusset Load 31
2.- Panel or Non Skid Load 35
2.5.- Sewing Procedure 37
2.5.1.- Closing Procedure Option 1 39
2.5.2.- Closing Procedure Option 2 43
2.6.- Ruffle Size Adjustments 47
2.7- Sizing the Panel 48
2.7.1.- Flow Chart Sizing Box Springs (Page 1) 49
2.7.2. Flow Chart Cover Adjustments (Page 2) 51
2.8.- Maintenance 53

3.-TECHNICAL MANUAL 54
3.1.- Individual Components 54
3.1.1.- Border Guide Rod Assembly 54
3.1.2.-EdgeGuide/Panel Tension Assembly 54
3.1.3.- Ruffler Assembly 54
3.1.4.- Stripper Blade 57
3.1.5.- Ruffler Blade 59
3.2 Sewing Head 62
3.2.1.- 1335MG (Yamato 2002) 62
1.- Individual components 62
2.- Lopper Timing 64
3.- Stitch Length 69
4.- Puller 73
3.3 Pneumatically 75
3.3.1.- Air Regulators 75
3.4 Electrical 77
3.4.1.- Main Power Switch 77
3.4.2 Stepping Motor Control Box 78
3.4.3.- AP-28-800Y1 Stepper Control Box 78
3.4.4.- Ruffler Control Box 79
3.4.5.- Eyes 81
3.5.- Efka Motor 83
3.5.1.- Connections 83
3.5.2.- Parameters 84
3.5.3.- Programming 85
3.6.- Maintenance 89
3.6.1.- Daily 89
3.6.2.- Weekly 90
3.6.3.- 3 Month 92
3.6.4.- 6 Month 92
3.7.- Troubleshooting 94
3.7.1.- Efka Controller Error 94
3.7.2.- Flow Chart EFKA Error E1 95
3.7.3.- Sewing Errors 96

3.7.4.- Sewing Errors – Yamato 2002 needle-feed head 97
3.7.5.- Flow Chart Stops at the corner 101
Assembly Drawings & Parts Lists 102
11335MGC-34SD Manual Pillowtop Ruffler, HD 104
11335MGC-34U Manual Pillowtop Ruffler, HD 106
11335MGC-ER Continental Foundation Ruffler, ERGO 107
11335MGC-SD Continental Foundation Ruffler, HD 108
11335MGC-SDAT Continental Foundation Ruffler, 18", CS 109
11335MGC-SU Continental Foundation Ruffler, HD 110
11335MGC-SUAT Continental Foundation Ruffler, HD 111
11335MGR Continental Foundation Ruffler, MD 112
11337AT Air Table Assembly, Universal 113
1337A-160 Air Table Assembly, Single Table 114
1334-1000A Sewing Head Detail 115
1335991 Ruffler Main Assembly, ERGO 116
1334S-02 Auto Flanging Workstation 118
1334-1100D Folder Mount Assembly, Flanger 119
1334-1200A Material Guide Assembly 120
1335105 Unwinder Assembly 122
1335155 Unwinder Assembly 124
1335194 Unwinder Motor Assembly 126
1335271 Foot Pressure Assembly 127
1335426 Puller Lift Assembly 128
1335293 Stand / Motor Assembly-MG200 130
1335294 Ruffler Assembly 132
1335298 Ruffler Mount Assembly, MG2002P 134
1335307 Ruffler Main Assembly 136
1335332 Ruffler Cylinder Lift Assembly 138
1335427 Sew Head Assembly 140
1335762 Sew Head Assembly 142
1335428 Puller Modification, Yamato 1804 144
1335750 Puller Assembly, Intermit. HD 146
1335716 Pneumatic Shelf 147
1335M-1005 Sit-Down Treadle Assembly 148
1335740 Roll Holder Assembly 150
1335M-2300B Pivot Assembly 151
1335M-430E Guide Roller Assembly 152

1335MF-500 Control Box Assembly 154
1335MG-10 Sewing Head Assembly 156
1959-700B Table and Frame Assembly 158
1959-800 Roll Holder Assembly 160
1335181 Stripper Blade Assembly 161
A-2216L5/16 Euro. Folder w/ Flange 162
A-2216M5/16 Continental Book Folder 163
33008708 Ball Bearing Disc Assembly 164
1959-PD Pneumatic Diagram 165
1335MF-PD Pneumatic Diagram 166
1334S-02WD Wiring Diagram 167
1335MF-WD Wiring Diagram 168
1335MFC-34WD2 Wiring Diagram 169
1335MGR-WD Wiring Diagram 170

Important Safety Instruction

This part of the Instruction Material is provided for the safe use of your equipment. It contains important information to help work safely with the unit and describes the dangers inherent in machinery. Some of these dangers are obvious, while others are less evident.

Mandatory Information

All persons operating and/or working on the 1335 Border Ruffler Workstation should read and understand all parts of the Safety Instructions. This applies, in particular, for persons who only operate and/or work on the unit occasionally (e.g. for maintenance and repair). Persons who have difficulty reading must receive particularly thorough instruction.

Scope of the Instruction Material

- The Instruction Material comprises:
- Safety information
- Operator Instructions
- Electrical and Pneumatic diagrams

And may also include;

- A list of recommended spare parts
- Instruction Manual(s) for components made by other manufacturers
- The layout and installation diagram containing information for installation

Intended Use

Our machines are designed and built in line with the state of the art and the accepted safety rules. However, all machines may endanger the life and limb of their users and/or third parties and be damaged or cause damage to other property, particularly if they are operated incorrectly or used for purposes other than those specified in the Instruction Manual.

Exclusion of Misuse

Non-conforming uses include, for example, using the equipment for something other than it was designed for, as well as operation without duly installed safety equipment. The risk rests exclusively with the end user.

Conforming use of the machine includes compliance with the technical data, information and regulations in all parts of the complete Instruction Material, as well as compliance with the maintenance regulations. All local safety and accident prevention regulations must also be observed.

Liability

The machine should only be operated when in perfect working order, with due regard for safety and the potential dangers, as well as in accordance with the Instruction Material. Faults and malfunctions capable of impairing safety should be remedied immediately. We cannot accept any liability for personal injury or property damage due to operator errors or non-compliance with the safety instructions contained in this booklet. The risk rests exclusively with the end user.

The Instruction Material should always be kept near the machine so that it is accessible to all concerned.

The local, general, statutory and other binding regulations on accident prevention and environmental protection must also be observed in addition to the Instruction Material. The operating staff must be instructed accordingly. This obligation also includes the handling of dangerous substances and provision/use of personal protective equipment.

The Instruction Material should be supplemented by instructions, including supervisory and notification duties with due regard for special operational features, such as the organization of work, work sequences, the personnel deployed, etc.

The personnel's awareness of the dangers and compliance with the safety regulations should be checked at irregular intervals.

Choice and Qualification of Personnel

Ensure that work on the machine is only carried out by reliable persons who have been appropriately trained for such work - either within the company, by our field staff or at our office - and who have not only been duly appointed and authorized, but are also fully familiar with the local regulations. Work on the machine should only be carried out by skilled personnel, under the management and supervision of a duly qualified engineer.

This not only applies when the machine is used for production, but also for special work associated with its operation (start-up and maintenance), especially when it concerns work on the hydraulic or electrical systems, as well as on the software/serial bus system.

Training

Everyone working on or with the machine should be duly trained and informed with regard to correct use of the safety equipment, the foreseeable dangers which may arise during operation of the machine and the safety precautions to be taken. In addition, the personnel should be instructed to check all safety mechanisms at regular intervals.

Responsibilities

Clearly define exactly who is responsible for operating, setting-up, servicing and repairing the machine. Define the responsibilities of the machine operator and authorize him to refuse any instructions by third parties if they run contrary to the machine's safety. This applies in particular for the operators of machines linked to other equipment. Persons receiving training of any kind may only work on or with the machine under the constant supervision of an experienced operator. Note the minimum age limits permitted by law.

A Word to the Operator

The greatest danger inherent in our machines:
is that of fingers, hands or loose clothing being drawn into a machine by live, coasting or rotating tools or assemblies or of being cut by sharp tools or burned by hot elements.

ALWAYS BE CONSCIOUS OF THESE DANGERS!

Safety Equipment on the Machines

All machines are delivered with safety equipment, which shall not be removed or bypassed during operation.

The correct functioning of safety equipment on machines and systems should be checked every day and before every new shift starts, after maintenance and repair work, when starting up for the first time and when restarting (e.g. after prolonged shutdowns).

If safety equipment has to be dismantled for setting-up, maintenance or repair work, such safety equipment shall be replaced and checked immediately upon completing the maintenance or repair work. All protective mechanisms shall be fitted and fully operational whenever the machine is at a standstill or if it has been shut down for a longer period of time.

Damage

If any changes capable of impairing safety are observed in the machine or its mode of operation, such as malfunctions, faults or changes in the machine or tools, appropriate steps must be taken immediately, the machine switched off and a proper lockout tagout procedure followed. The machine should be examined for obvious damage and defects at least once per shift. Damage found shall be immediately remedied by a duly authorized person before resuming operation of machine.

The machine should only be operated when in perfect working order and when all protective mechanisms and safety equipment, such as detachable protective mechanisms, emergency STOP systems, etc. are in place and operational.

Faults or Errors

The machine must be switched off and all moving or rotating parts allowed to come to a standstill and secured against accidental restart before starting to remedy any faults or errors.

Signs on the Machine

Safety and danger signs on the machine should be observed and checked at regular intervals to ensure that they are complete and undamaged. They should be clearly visible and legible at all times.
Clothing, Jewelry, Protective Equipment
Long loose hair, loose-fitting clothes, gloves and jewelry, including rings, should be avoided in order to avoid injuries due to being caught, drawn in and wound up inside the machine.

Protective Eyewear

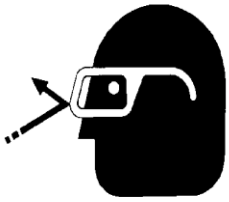

Protective eyewear that has been tested by the local authorities should be worn whenever there is a possibility of loose or flying objects or particles such as when cleaning the machine with compressed air.

Tools

Always count the number of tools in your possession before starting work on the machine. This will allow you to check that no tools have been left behind inside the machine. Never leave a tool in the machine while working.

Oils, Lubricants, Chemicals

Note the applicable safety regulations for the product used.

No Smoking, Fire, Explosion Hazard

Smoking and open flame (e.g. welding work) should be prohibited in the production area due to the risk of fire and explosions.

Workplace

A clear working area without any obstructions whatsoever is essential for safe operation of the machine. The floor should be level and clean, without any waste.

The workplace should be well lit, either by the general lighting or by local lights.

Emergency STOP

The emergency STOP buttons bring all machine movements to a standstill. Make sure you know exactly where they are located and how they work. Try them out. Always ensure easy access to the nearest emergency STOP button while working on the machine.

First Aid

1. Keep calm even when injured.
2. Clear the operator from the danger zone. The decision of what to do and whether to seek additional assistance rests entirely with you, particularly if someone has been trapped.
3. Give First Aid. Special courses are offered by such organizations as the employers' liability insurance association. Your colleagues should be able to rely on you and vice versa.
4. Call an ambulance. Do you know the telephone numbers for the ambulance service, police and fire service?

Important Notices

Reporting and Fighting Fires

Read the instructions posted in the factory with regard to reporting fires and the emergency exits. Make sure you know exactly where the fire extinguishers and sprinkler systems are located and how they are operated. Pass on the corresponding information to the firemen when they arrive. Ensure there are enough signs to avoid fire hazards.

The following fire extinguishers may be used:
- Dry powder extinguishers, ABC fire-extinguishing powder.
- Carbon dioxide fire extinguishers to DIN 14461 for electronic components. Great care must be exercised when using carbon dioxide fire extinguishers in confined, badly ventilated rooms (see DIN 14406 and 14270).

Isolate the machine from the power supply if a fire breaks out. Do not use water on burning electrical parts until it is absolutely certain that they have been completely disconnected from the power supply. Burning oils, lubricants, plastics and coatings on the machine can give off gases and vapors that may be harmful to your health.
A qualified person should be consulted to repair the damage after a fire.

Electrical Power Supply

Before undertaking any maintenance or repair work on the machine, switch off the electrical power to the machine at the main source and secure it with a padlock so that it cannot be switched on again without authorization.
In practice, this may mean that the technician, electrician and operator all attach their own padlock to the master switch simultaneously so that they can carry out their work safely. Locking extension plates should be available for multiple locks if required. The primary purpose for a lockout/tagout procedure is to protect workers from injury caused by unexpected energizing or start-up of equipment.

Energy sources (electrical/pneumatic/hydraulic, etc.) for the equipment shall be turned off or disconnected and the switches locked or labeled with a warning tag. It is the responsibility of the employer to establish control procedures. Follow lockout/tagout procedures before, setup and/or any service or maintenance work is performed, including lubrication, cleaning or clearance of jams.

Caution: The machine is still not completely de-energized even when the master switch is off.

- Electricity - The machine is always isolated from the electrical power supply whenever the master switch has been switched off. However, this does not apply for the power supply in the control cabinet, nor for equipment that does not draw its power via the master switch.

- Pneumatic / hydraulic energy - Almost all our machines carry compressed air. In addition to switching off the master switch, the air supply must also be disconnected and the machine checked to ensure it is depressurized before starting any work on the machine; otherwise the machine may execute uncontrolled movements.

- Kinetic energy - Note that some motors or spindles, for example, may continue to run or coast run on after being switched off.

- Potential energy - Individual assemblies may need to be secured if necessary for repair work.

Delivery of the Machine/Packaging

Note any markings on the packaging, such as weights, lifting points and special information. Avoid temperature fluctuations. Condensation may damage the machine.

Transport Damage

The packaging and machine must immediately be examined for signs of damage in transit. Such damage must be reported to the shipper/transporter within the applicable time limits. Contact Atlanta Attachment Company and/or your transport insurer immediately, if signs of damage are visible. Never operate a damaged machine.

Interim Storage

If the machine has to be stored temporarily, it must be oiled or greased and stored in a dry place where it is protected from the weather in order to avoid damage. A corrosion-inhibiting coating should be applied if the machine has to be stored for a longer period of time and additional precautions taken to avoid corrosion.

Transporting the Machine

Disconnect the machine from all external connections and secure any loose assemblies or parts. Never step under a suspended load. When transporting the machine or assemblies in a crate, ensure that the ropes or arms of a forklift truck are positioned as close to the edge of the crate as possible. The center of gravity is not necessarily in the middle of the crate. Note the accident prevention regulations, safety instructions and local regulations governing transport of the machine and its assemblies.

Only use suitable transport vehicles, hoisting gear and load suspension devices that are in perfect working order and of adequate carrying capacity. Transport should only be entrusted to duly qualified personnel.

Never allow the straps to rest against the machine enclosure and never push or pull sensitive parts of the machine. Ensure that the load is always properly secured. Before or immediately after loading the machine, secure it properly and affix corresponding warnings.
All transport guards and lifting devices must be removed before the machine is started up again. Any parts that are to be removed for transport must be carefully refitted and secured before the machine is started up again.

Workplace Environment

Our machines are designed for use in enclosed rooms: Permissible ambient temperature approx. 5 - 40 °C (40 - 104 °F). Malfunctions of the control systems and uncontrolled machine movements may occur at temperatures outside this range.
Protect against climatic influences, such as electrostatic charges, lightning strikes, hail, storm damage, high humidity, salinity of the air in coastal regions.

Protect against influences from the surroundings: no structure-borne vibrations, no grinding dust, or chemical vapors.
Protect against unauthorized access.
Ensure that the machine and accessories are set up in a stable position.
Ensure easy access for operation and maintenance (Instruction Manual and layout diagram); also verify that the floor is strong enough to carry the weight of the machine.

Local Regulations

Particular attention must be paid to local and statutory regulations, etc. when installing machines and the plant (e.g. with regard to the specified escape routes). Note the safety zones in relation to adjacent machines.

Maintenance

General Safety Instructions

The machine shall be switched off, come to a standstill and be secured so that it cannot be switched on again inadvertently before starting any maintenance work whatsoever. Use proper lockout/tagout procedures to secure the machine against inadvertent startup.
Remove any oil, grease, dirt and waste from the machine, particularly from the connections and screws, when starting the maintenance and/or repair work. Do not use any corrosive-cleaning agents. Use lint-free rags.
Retighten all screw connections that have to be loosened for the maintenance and repair work. Any safety mechanisms that have to be dismantled for setting-up, maintenance or repair purposes must be refitted and checked immediately after completing the work.

Maintenance, Care, Adjustment

The activities and intervals specified in the Instruction Manual for carrying out adjustments, maintenance and inspections must be observed and parts replaced as specified.

All hydraulic and pneumatic lines should be examined for leaks, loose connections, rubbing and damage whenever the machine is serviced. Any defects found must be remedied immediately.

Waste, Disassembly, Disposal

Waste products should be cleared from the machine as soon as possible as not to create a fire hazard. Ensure that fuels and operating lubricants, as well as replacement parts are disposed of in a safe and ecologically acceptable manner. Note the local regulations on pollution control.

When scrapping (disassembling) the machine and its assemblies, ensure that these materials are disposed of safely. Either commission a specialist company familiar with the local regulations or note the local regulations when disposing of these materials yourself. Materials should be sorted properly.

Repair

Replacement Parts

We cannot accept any liability whatsoever for damage due to the use of parts made by other manufacturers or due to unqualified repair or modification of the machine.

Repair, Electrical

The power supply must be switched off (master switch off) and secured so that it cannot be switched on again inadvertently before starting any work on live parts.

Those parts of the machine and plant on which inspection, maintenance or repair work is to be carried out must be isolated from the power supply, if specified. The isolated parts must first be checked to determine that they are truly de-energized before being grounded and short-circuited. Adjacent live parts must also be isolated.

The protective measures implemented (e.g. grounding resistance) must be tested before restarting the machine after all assembly or repair work on electric parts.

Signal generators (limit switches) and other electrical parts on the safety mechanisms must not be removed or bypassed. Only use original fuses or circuit overloads with the specified current rating. The machine must be switched off immediately if a fault develops in the electrical power supply.

The electrical equipment of our machines must be checked at regular intervals and any defects found must be remedied immediately.

If it is necessary to carry out work on live parts, a second person should be on hand to operate the emergency OFF switch or master switch with voltage release in the event of an emergency. The working area should be cordoned off and marked by a warning sign. Only use electrically insulated tools.

Ventilation/Hazardous Gases

It is the end users responsibility to ensure adequate ventilation is provided to exhaust any and all noxious or hazardous gases that may be present in the working environment.

Hydraulic and Pneumatic Systems

Work on hydraulic or pneumatic equipment shall only be carried out by persons with training, knowledge and experience of hydraulic systems. Pressure lines shall be depressurized before starting any repair work.

General Liability

Liability for machine damage and personal injury is extinguished completely if any unauthorized conversions or modifications are undertaken. The machine must not be modified, enlarged or converted in any way capable of affecting safety without the manufacturer's prior approval.

Starting Machine Movements

Read the Instruction Manual carefully to establish which keys and functions start machine movements.

A Word to the End User

The end user has sole responsibility to enforce the use of safety procedures and guards on the machine. Any other safety devices or procedures due to local regulations should be should be retrofitted in accordance to these regulations and/or the EC Directive on the safety of machines.

Operator's position must always be readily accessible. Escape routes must always be kept clear and safety areas should be identified.

Safety Precautions

Safety should be a constant concern for everyone. Always be careful when working with this equipment. While normal safety precautions were taken in the design and manufacture of this equipment, there are some potential safety hazards.
Everyone involved with the operation and maintenance of this equipment should read and follow the instructions in this manual.
Operate the equipment only as stated in this manual. Incorrect use could cause damage to the equipment or personal injury.
It is the owner's responsibility to make certain that the operator reads and understands this manual before operating this equipment. It is also the owner's responsibility to make certain that the operator is a qualified and physically able individual, properly trained in the operation of this equipment.
Specific safety warning decals are located on the equipment near the immediate areas of potential hazards. These decals should not be removed or obliterated. Replace them if they become non-readable.

- ALWAYS keep safety shields and covers in place, except for servicing.
- ALWAYS maintain a safe distance from people when operating.
- ALWAYS operate equipment in daylight or with adequate working lights.
- Follow daily and weekly checklists, making sure hoses are tightly secured and bolts are tightened.
- ALWAYS watch and avoid holes or deep depressions.
- ALWAYS wear adequate eye protection when servicing the hydraulic system and battery.
- NEVER operate a poorly maintained machine.
- NEVER allow persons to operate this machine without proper instruction.
- NEVER put hands or feet under any part of the machine while it is running.
- NEVER attempt to make any adjustments or repairs to the machine while running. Repairs or maintenance should be performed by trained personnel only.
- NEVER work under the machine unless it is safely supported with stands, blocks or a hoist and blocks.
- NEVER touch hot parts of machine.

1.- INSTALLATION MANUAL

It is important that the machine operator read this manual and is familiar with all the functions and safety concerns of the unit before operating.

1.2.- Parts and Components

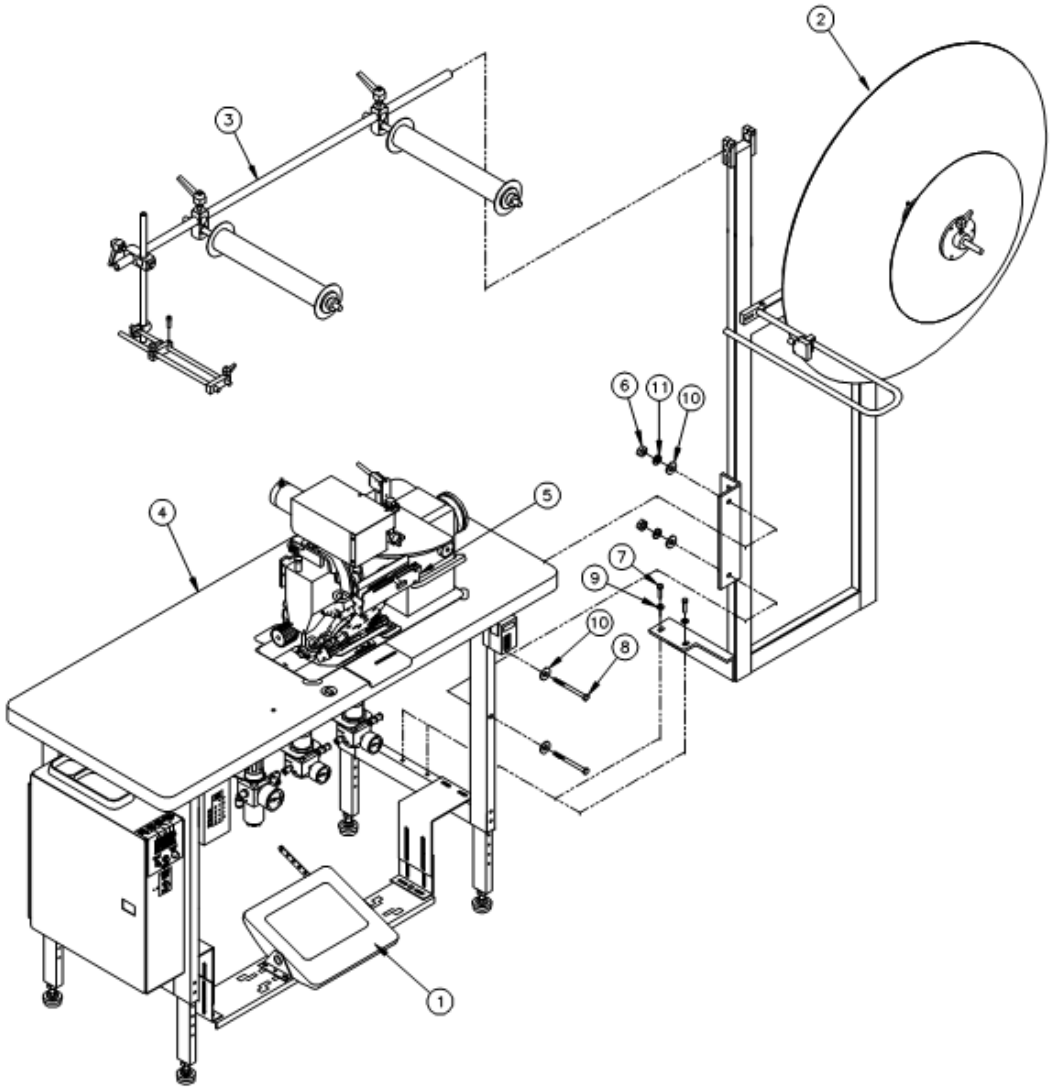

	PART #	DESCRIPTION
1	1335M-1005	Sit Down Treadle Assy
2	1335M-4000A	Unwinder Assy
3	1335M-420	Guide Roller Assy
4	1335M-G	Generic Console
5	A-2216G	Book Folder
6	NNH3/8-16	Hex Nut
7	SSHC01048	Screw, Hex Cap

	PART #	DESCRIPTION
8	SSHC25192	Screw, Hex Cap
9	WWFS1/4	Flat Washer
10	WWFS3/8	Flat Washer
11	WWL3/8	Lock Washer
12	1335M-2002E	Ruffler Blade
13	SNDBX1140	Needle

1.2. - Technical Data

Model	1335MD	1335MF	1335MG	1335MH
Picture				
Feeding / Stitch type		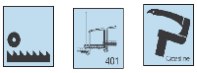		
Description	Multi-Purpose Ruffler Workstation Pillow-top Gusset Ruffler Euro-top Ruffler Continental Foundation Ruffler Bottom Capping Ruffler	Multi-Purpose Ruffler Workstation Pillow-top Gusset Ruffler Euro-top Ruffler Continental Foundation Ruffler Bottom Capping Ruffler	Multi-Purpose Ruffler Workstation Pillow-top Gusset Ruffler Euro-top Ruffler Continental Foundation Ruffler Bottom Capping Ruffler	Multi-Purpose Ruffler Workstation Pillow-top Gusset Ruffler Euro-top Ruffler Continental Foundation Ruffler Bottom Capping Ruffler
Sewing Head	Mitsubishi 2210	Yamato 1804	Yamato 2002	Singer 300UX6
Needle System	DBX1-2	SN62X5721	SN62X5924	SN62X8524
Type of Material	Light Weight	Medium Weight	Medium Weight (FR)	Heavy Weight (FR)
Production	25 - 30 pieces per hour	25 - 30 pieces per hour	25 - 30 pieces per hour	20 to 25 pieces per Hour
Puller	Electronic servo drive puller	Internal mechanically driven adjustable puller	Internal mechanically driven adjustable puller	Electronic servo drive puller
Sewing Motor	Efka Electronic servo drive motor with needle positioner (no synchronizer required).	Efka Electronic servo drive motor with needle positioner (no synchronizer required).	Efka Electronic servo drive motor with needle positioner (no synchronizer required).	Efka Electronic servo drive motor with needle positioner (no synchronizer required).
Pre-set speed	4,000	3,500	3,200	2,500
Presser foot	Pneumatic foot and puller lift	Pneumatic foot and puller lift	Pneumatic foot and puller lift	Pneumatic foot and puller lift
Electrically	220VAC 5 Amp 50/60 HZ Single Phase	220VAC 5 Amp 50/60 HZ Single Phase	220VAC 5 Amp 50/60 HZ Single Phase	220VAC 5 Amp 50/60 HZ Single Phase
Pneumatic	70- 80 Psi, 2 SCFM	70- 80 Psi, 2 SCFM	70- 80 Psi, 2 SCFM	70- 80 Psi, 2 SCFM
Ruffler	Servo-driven ruffler mechanism	Servo-driven ruffler mechanism	Servo-driven ruffler mechanism	Servo-driven ruffler mechanism
Folders	Adjustable folder for symmetrical and offset gusset (As required)	Adjustable folder for symmetrical and offset gusset (As required)	Adjustable folder for symmetrical and offset gusset (As required)	Adjustable folder for symmetrical and offset gusset (As required)
	A-2216K5/16 Folder 6"Max width 5/16 Spacer	A-2216K5/16 Folder 6"Max width 5/16 Spacer	A-2216K5/16 Folder 6"Max width 5/16 Spacer	A-2216K5/16 Folder 6"Max width 5/16 Spacer
	A-2216L5/16 Folder 9"Max width 5/16 Spacer	A-2216L5/16 Folder 9"Max width 5/16 Spacer	A-2216L5/16 Folder 9"Max width 5/16 Spacer	A-2216L5/16 Folder 9"Max width 5/16 Spacer
	A-2216M5/16 Folder 6"Max width 5/16 Spacer	A-2216M5/16 Folder 6"Max width 5/16 Spacer	A-2216M5/16 Folder 6"Max width 5/16 Spacer	A-2216M5/16 Folder 6"Max width 5/16 Spacer
	A-2216S5/8, One Piece Border Folder	A-2216S5/8, One Piece Border Folder	A-2216S5/8, One Piece Border Folder	A-2216S5/8, One Piece Border Folder
Operation	Stand up or sit down (customer specified)	Stand up or sit down (customer specified)	Stand up or sit down (customer specified)	Stand up or sit down (customer specified)

1.3 Installation & Set Up

• Remove any shipping straps from machine.

• Inspect the machine for any damage that may have occurred during shipping. If damage is found, report this immediately to your supervisor. Document the damage and provide details and photographs.

• Provide a 220VAC, single phase, 5 Amp

• Provide 1/4" air supply line (80 PSI).

• Mount and adjust the Guide Roller Assembly. (See 1.2.-Parts and components)

• Oil is removed before shipping. Check the oil level in the oil pan.
If you have the:

1335 MH (Singer 300UX6) To check oil, unclamp the puller motor bracket and lean the puller motor back. (See Fig. 2) Then lean the head back to access the oil pan. Be sure to re-clamp the puller motor bracket and insert the puller drive shaft into the u-joint

Fig. 2

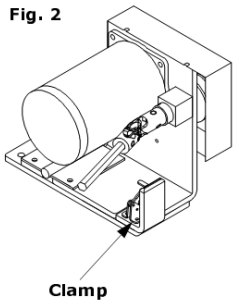

1335MG Yamato 2002. Check oil direct in front to the machine

• Is recommended to take the data of initial factory parameters on the machine before connections.

2.- OPERATING MANUAL

It is important that the machine operator read this manual and is familiar with all the functions and safety concerns of the unit before operating.

2.1.- Individual Components

2.1.1.- Foot Pedal

Stepping on the left side of the pedal will raise the foot and puller. Stepping on the right side will start sewing.

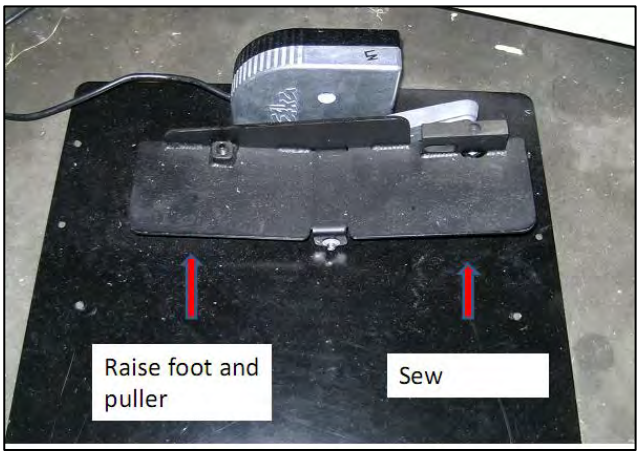

2.1.2.- Wipe Switch

The wipe switch is located on the front right hand side of the main sewing table. The wipe switch is used to move the border material guide/folder up or down. To use run you finger through the channel in the middle of the sensor.

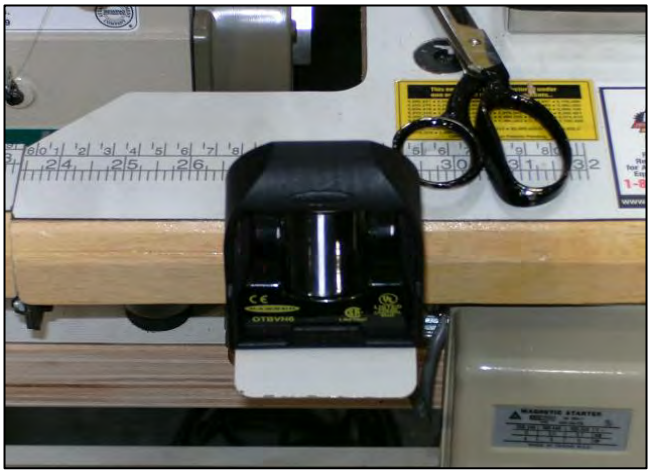

2.1.3.EdgeGuide/Panel Tension Assembly

The edge guide/panel tension assembly is located in front of the sewing head on the flip down portion of the table. The edge guide (1) is used to guide the right edge of the panel.

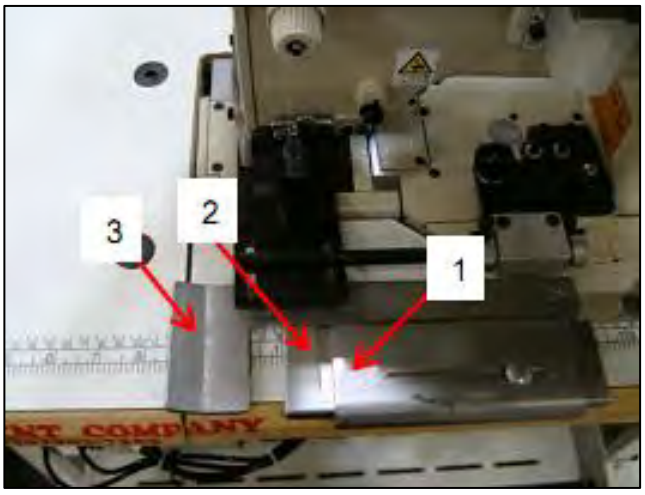

It is adjusted by loosening the wing nut (5) located under the table and slide the guide left or right. This setting is based on the sew margin needed. The panel tension finger (2) is used to add tension to the panel as it is being sewn.

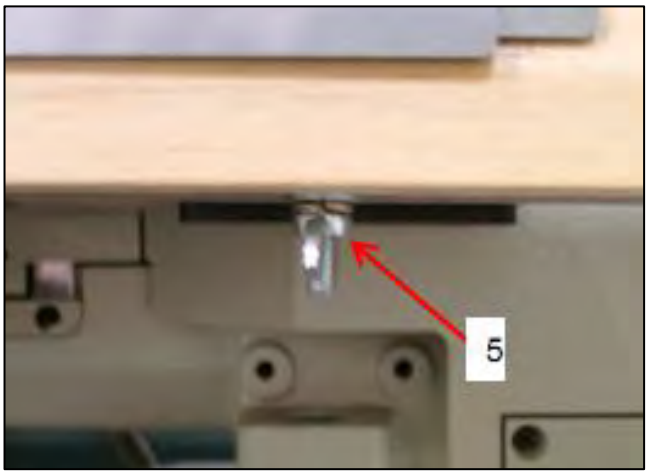

2.1.4.- Efka Motor

The Efka Motor is mounted to the bottom of the table. It is responsible for running the sewing head when the left side of the foot pedal is pressed.

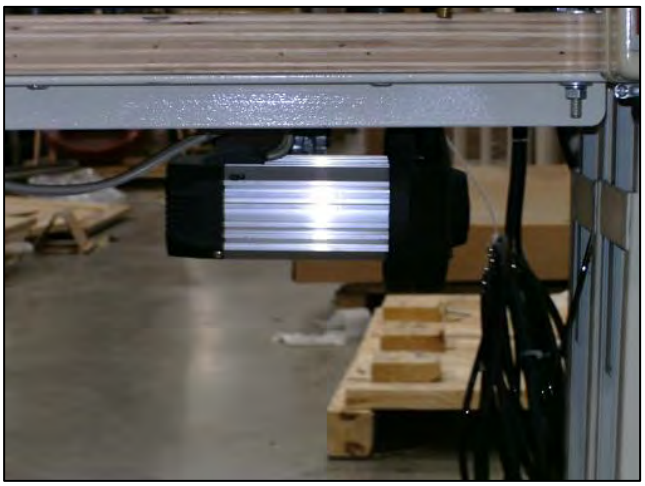

2.1.5.- Control Box

The Efka Motor Control Box contains an On/Off switch which should remain in the ON position at all times. A Display that shows the current maximum set RPM when in normal mode. Green Push Buttons that are used during programming the motor and to activate the backtack, foot up or down, and needle position at stop. The only LED that is lighted on this machine is the 7th LED. To activate the LED's you press the button beside each pair, push the button once and the top LED lights up, push it twice and the bottom LED lights up, push it three times and both LED's are off.

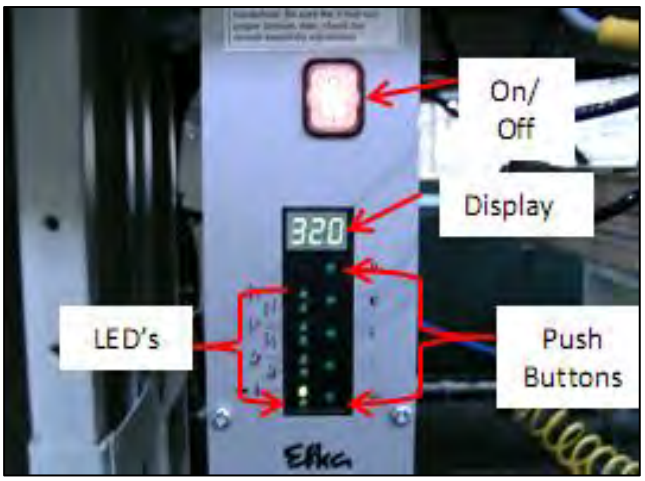

2.2.- Changing the Needle

Please follow all safety procedures, turning the power off to the machine is recommended.

1) Locate the slotted needle screw, located on the left side of the needle chuck.

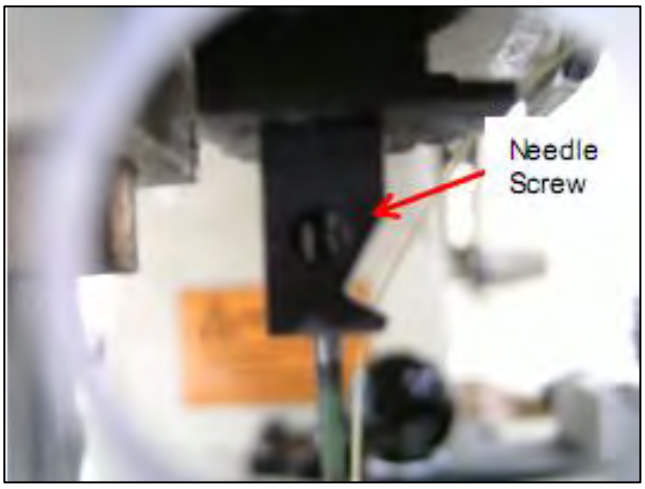

2) Insert a small flat blade screw drive through the access hole in the plexi-glass guard and loosen the screw. Do not remove the screw. Remove the old needle.

3) Insert the new needle into the needle hole at the bottom of the needle chuck, push up until it stops. Turn the needle until the scarf of the needle is pointing to the left side. Tighten the needle screw.

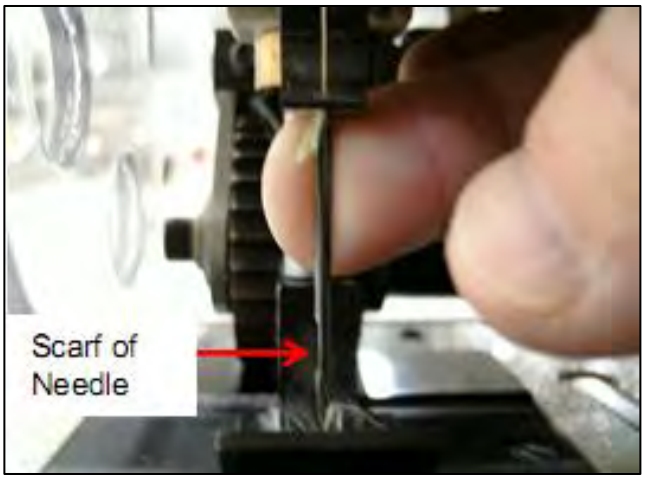

Machine	Sewing Head	Needle System
1335MD	Mitsubishi 2210	DBX1-2
1335MG	Yamato 1804	SN62X5721
1335MD	Yamato 2002	SN62X5924
1335MH	Singer 300UX6	SN62X8524

4) Thread the new needle, should be from right to left.

2.3 Threading

2.3.1.- 1335MG (Yamato 2002)

1.- Needle

Please follow all safety procedures, turning off power is recommended.

Swing out the ruffler assembly to access the thread.

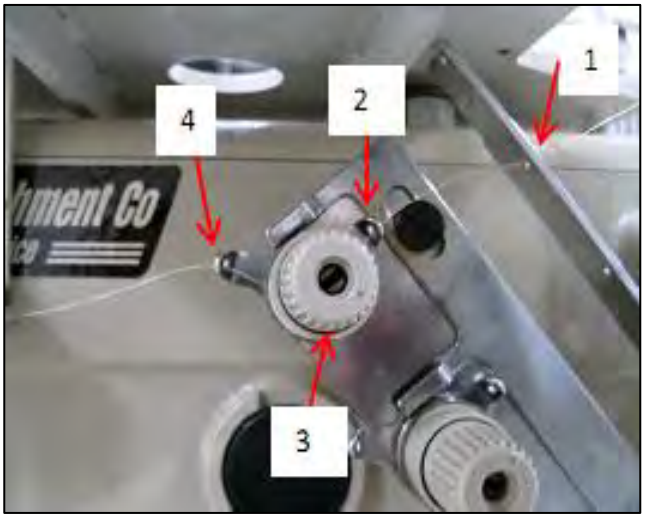

1)Start by threading the needle thread through the thread guide.

2) Then through the first thread tension eyelet.

3)Around the bottom of and between the tension disks.

4) Then through the second thread tension eyelet.

5) Through the first eyelet before the silicon reservoir.

6) Lift lid on silicon reservoir and pass thread through it.

7) Through the second eyelet after the silicon reservoir.

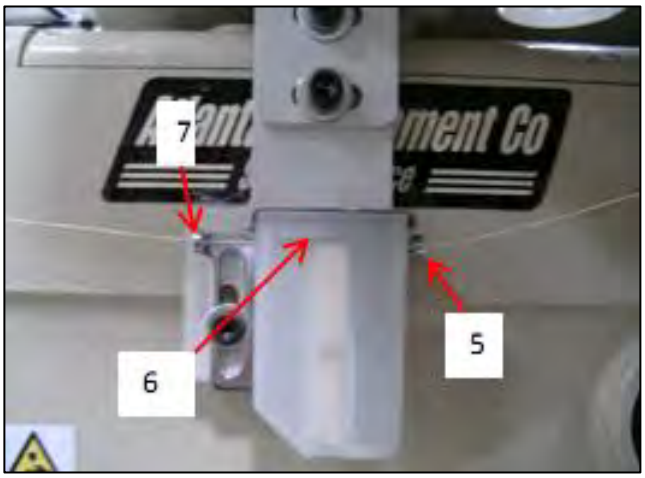

8) Through the first eyelet of the needle thread pre-tension.

9) Over the top of and between the tension disks

10) Through the second eyelet of the needle thread pre-tension.

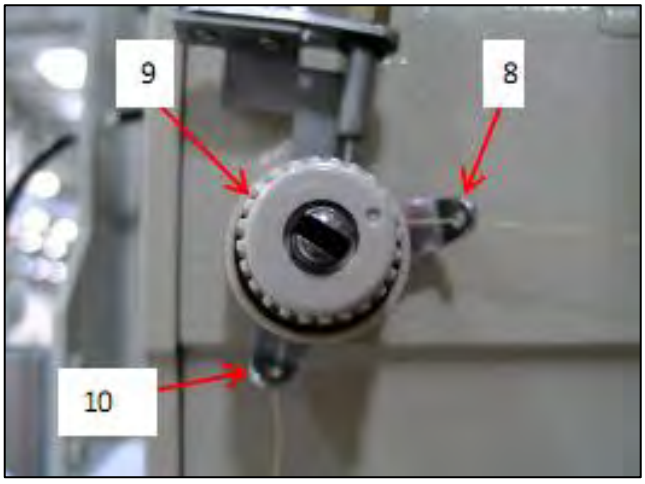

11) Through the needle thread take up eyelet

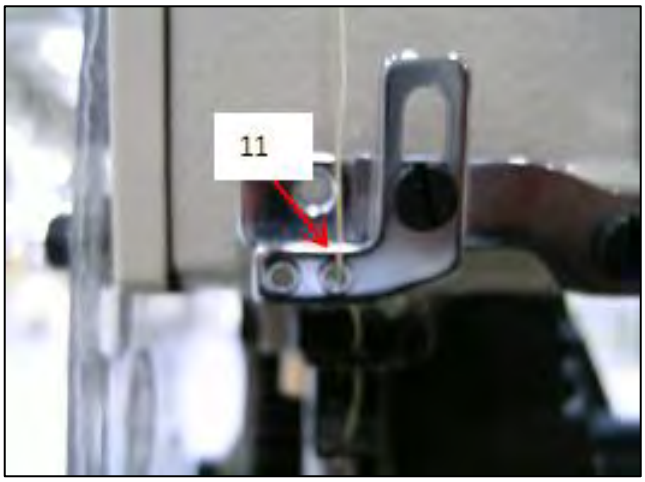

12) Through the needle thread take up eyelet on the needle bar.

13) Through the needle thread eyelet on the needle chuck.

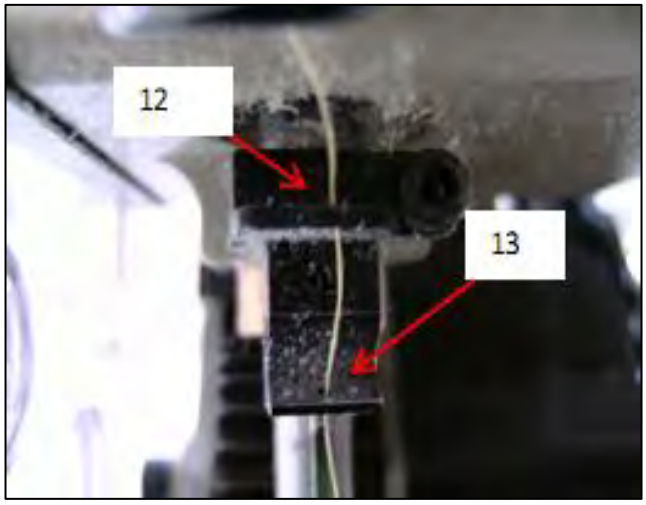

14) Through the needle eye, should go in right to left.

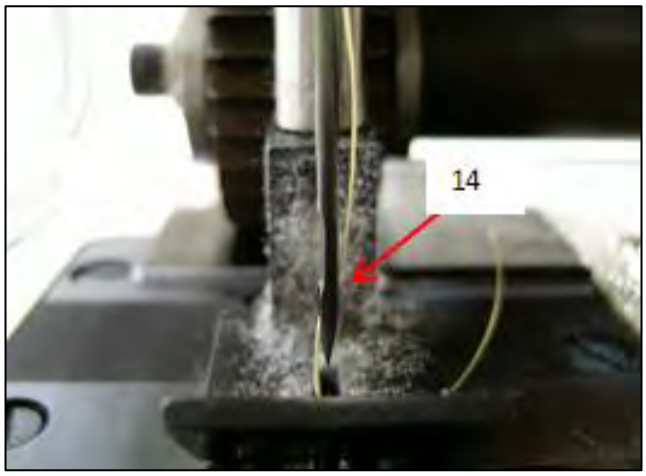

2.- Looper

Please follow all safety procedures, turning off power is recommended.

1) Thread through the top thread tension eyelet.

2) Go around the right of the tension and between the tension disks

3) Through the bottom thread tension eyelet.

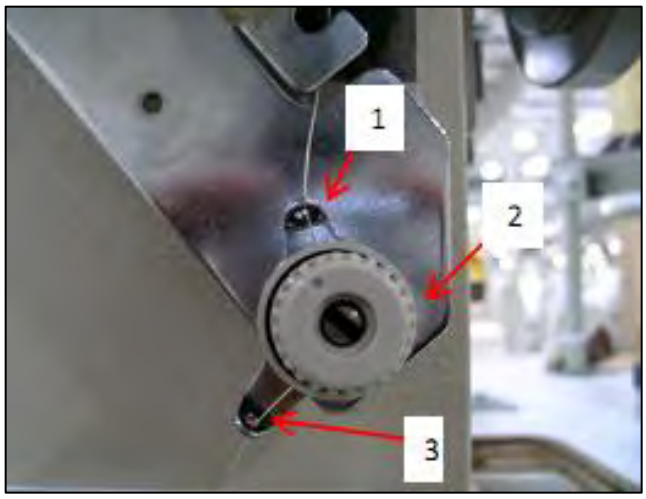

4) Lift up on the stripper blade and swing out to the right.

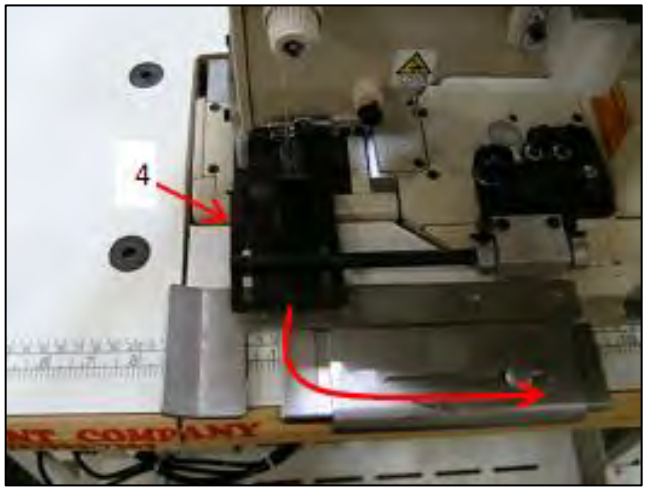

5) Lift up on the front table access and fold down.

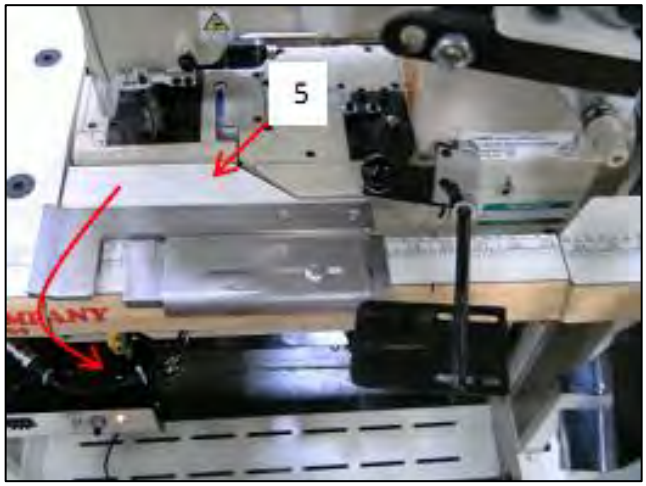

6) Open the first front cover of the sewing head

7) Open the second front cover of the sewing head.

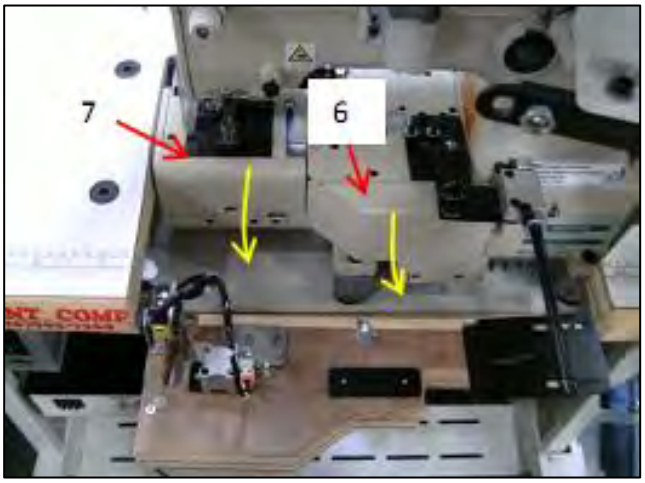

Table and sewing head should look like picture to the right.

8) Thread through the first eyelet after the thread tension.

9) Thread through the second eyelet on the side of the sewing head.

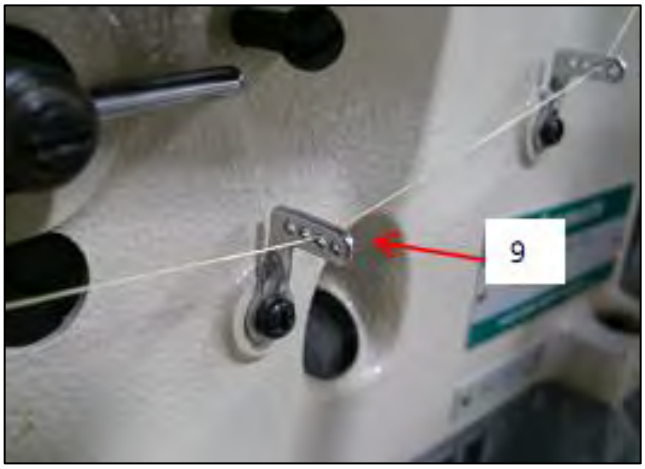

10) Thread through the first eyelet of the looper thread take up bracket.

11) Thread through the looper take up lever.

12) Thread through the second eyelet of the looper thread take up bracket.

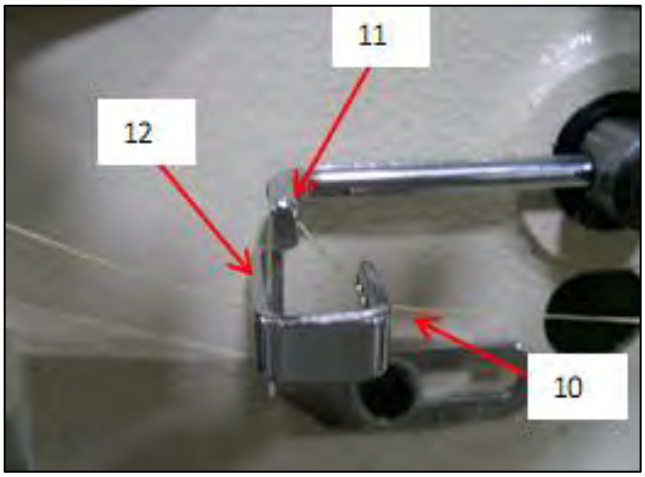

13) Thread through the eyelet.

14) Thread through looper eyelet

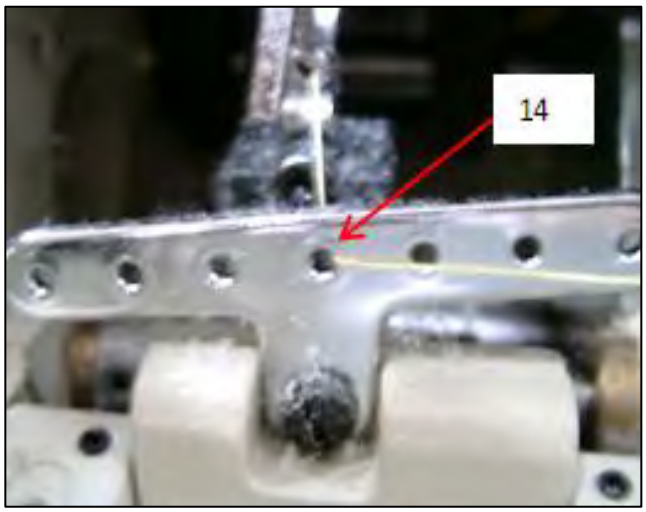

15) Lift up on the lever located to the right of the throat plate. Never lift up on the lever while the machine is sewing, serious damage or injury may occur.

16) By hand turn the hand wheel towards the front of the sewing head, so that the "P" on the hand wheel gets closer to the brass marker on the sewing head. The lever will get harder to hold up and the hand wheel will be harder to rotate. Keep the lever up and rotate the hand wheel until the looper pops forward, the Hand wheel will stop turning when the looper is completely out.

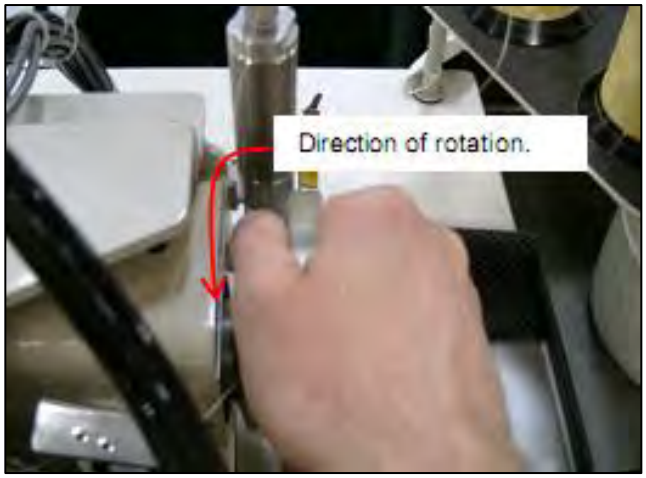

17) Thread through the eyelet on the needle guard on the looper.

18) Thread through the back hole on the looper.

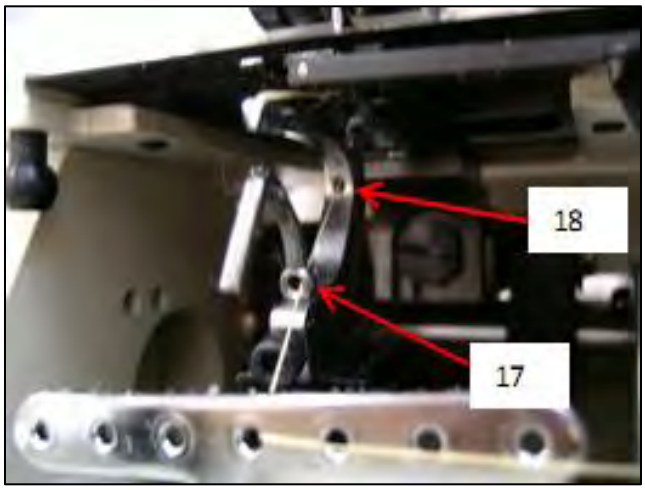

19) Pass the thread along the groove in the looper.

20)Go up through the eye of the looper.

21)Turn the Hand wheel about ½ turn to pop the looper back in place. If you forget, when you start sewing the looper will go back in place by themselves without damaging the machine. Close all covers and doors.

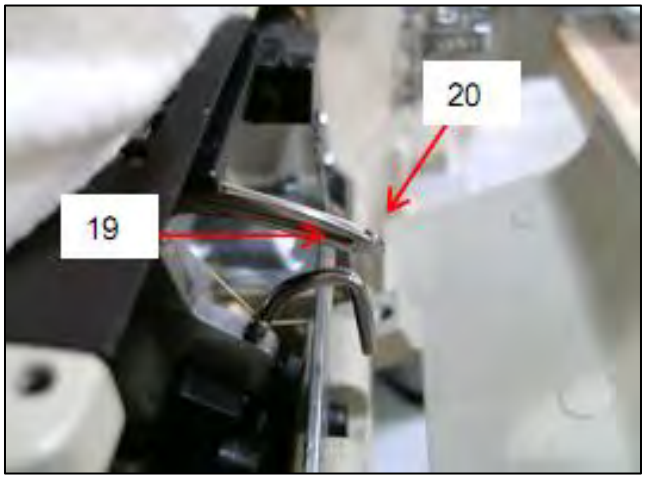

2.3.2.- 1335MH (Singer 300UX6)

1.- Needle

Please follow all safety procedures, turning off power is recommended.

To start raise the material guide/folder and swing out the ruffler assembly.

1) Pull the thread through the eyelet located on the ruffler assembly mount. Top right on the sewing head.

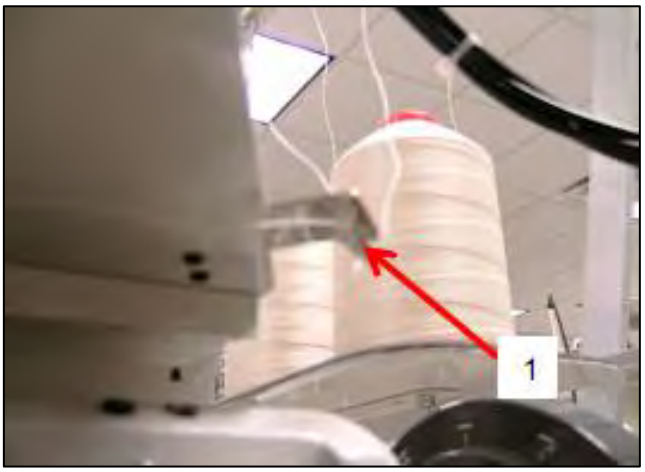

2) Thread through the top eyelet of the needle thread tension assembly.

3) Thread around and between the tension disks.

4) Thread through the bottom eyelet of the needle thread tension assembly.

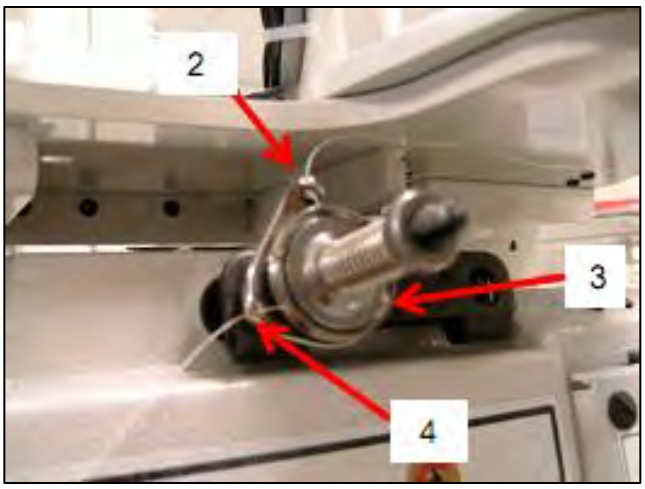

5) Thread through the first thread guide after the needle thread tension assembly. Located on the side of the sewing head.

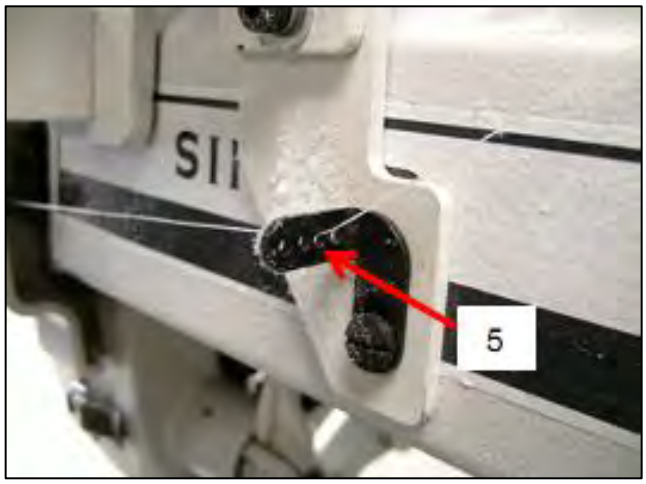

6) Undo the latch for the crank case cover and open the door.

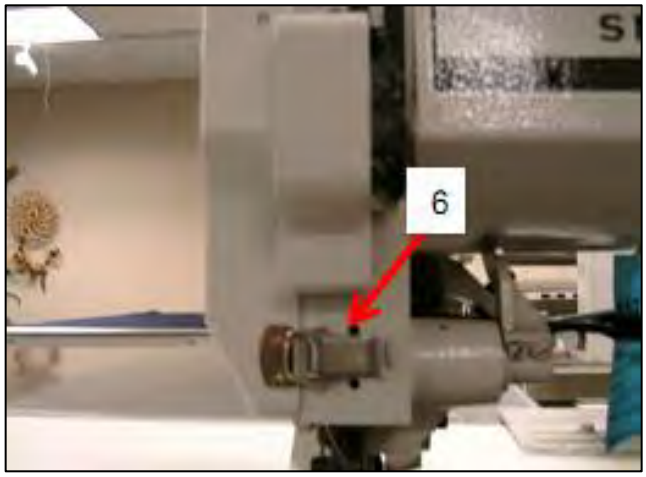

7) Thread through the needle thread take-up eyelet located on the side of the sewing head.

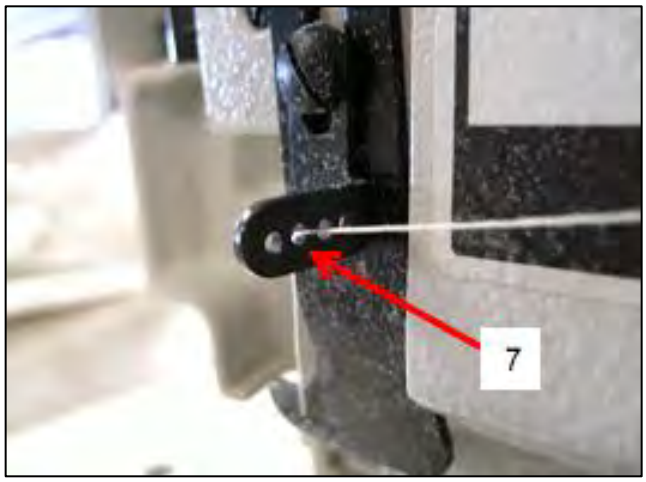

8) Thread through the bottom thread guide of the needle thread take-up.

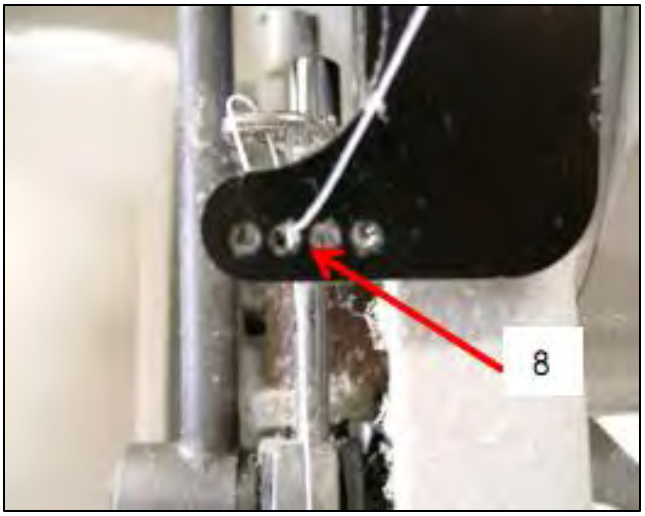

9) Thread through the take up rod located on the needle bar clamp.

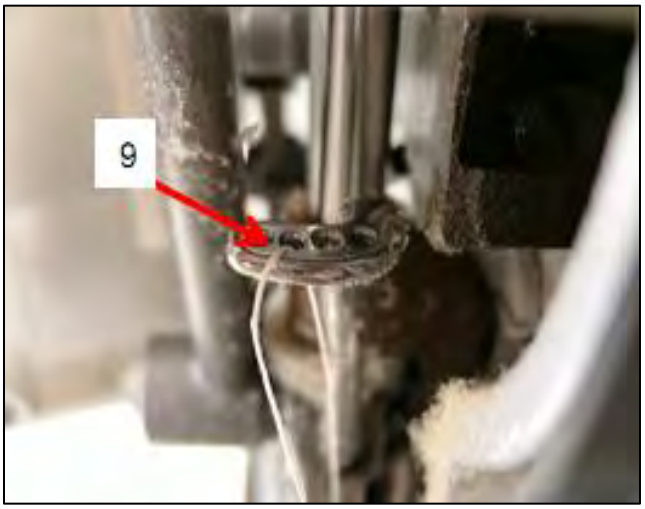

10) Thread through the thread guide just in front of the needle.

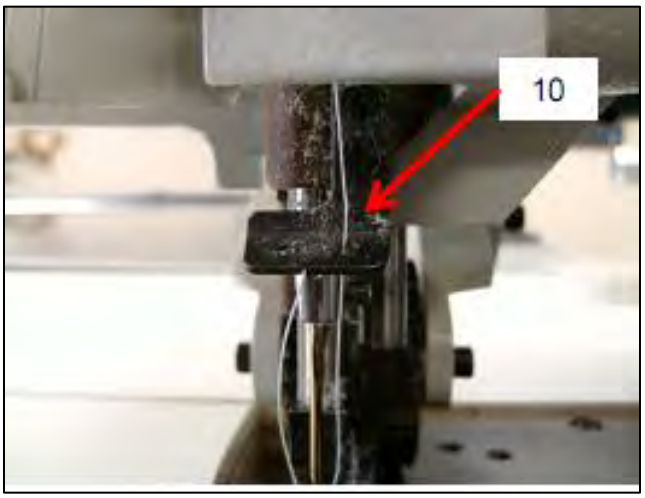

11) Thread through the eye of the needle, going right to left.

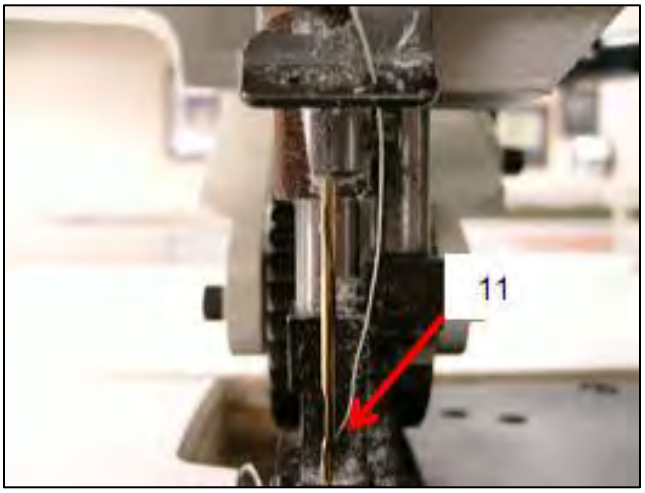

2.- Looper

1) Swing out the ruffler assembly and the stripper blade assembly. Open the access door in the table top.

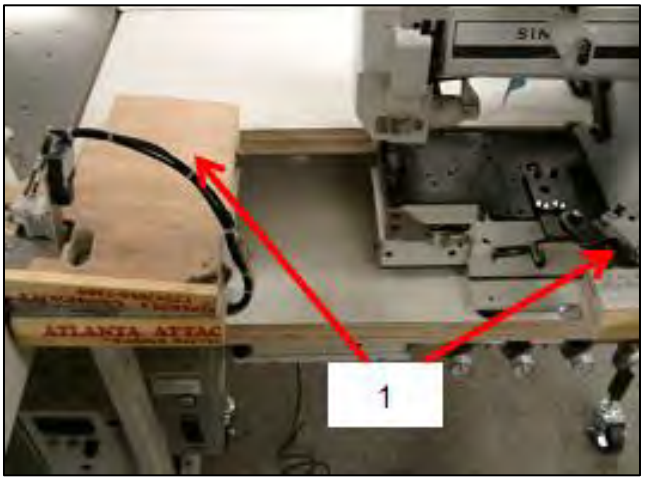

2) Undo the latch for the looper access door.

3) Open the looper access door.

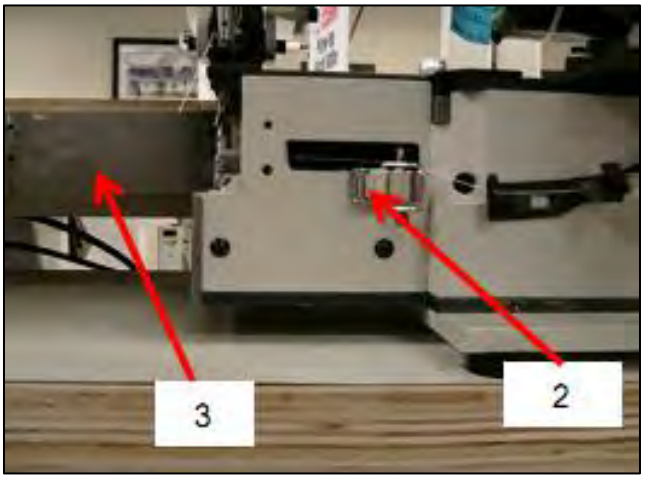

4) Push the thread down through the thread tube on the right side of the sewing head.

5) Thread through the top eyelet of the looper thread tension assembly.

6) Pull thread around the bottom of and between the disks of the looper thread tension.

7) Thread through the bottom eyelet of the looper thread tension assembly

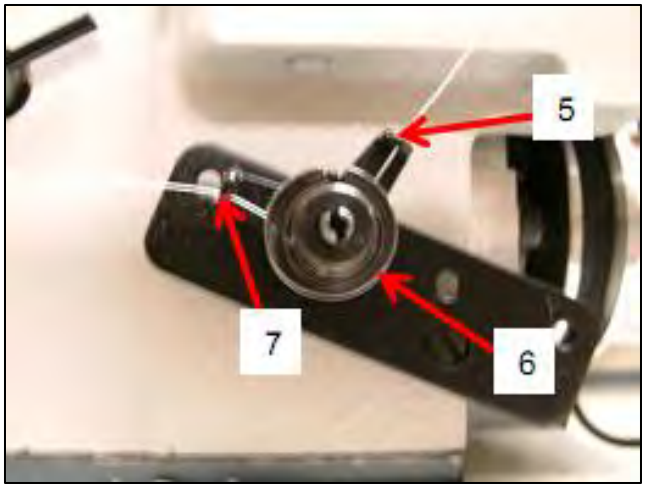

8) Thread through the first thread guide of the looper thread take up assembly.

9) Thread through the looper thread take up arm.

10) Thread through the second thread guide of the looper thread take up assembly.

11) Thread through the third thread guide of the looper thread take up assembly.

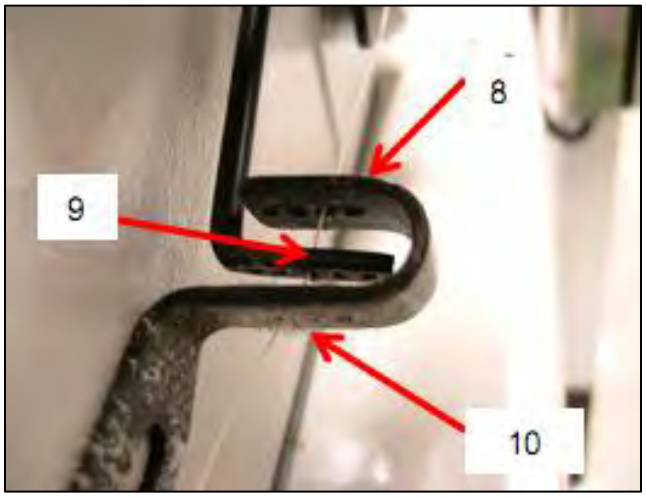

11) Thread through the third thread guide of the looper thread take up assembly

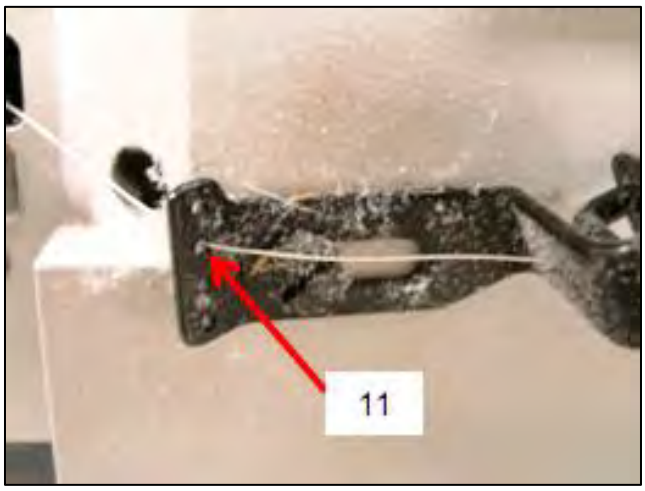

12) Thread through the eyelet post located in the access slot on the cover of the looper assembly.

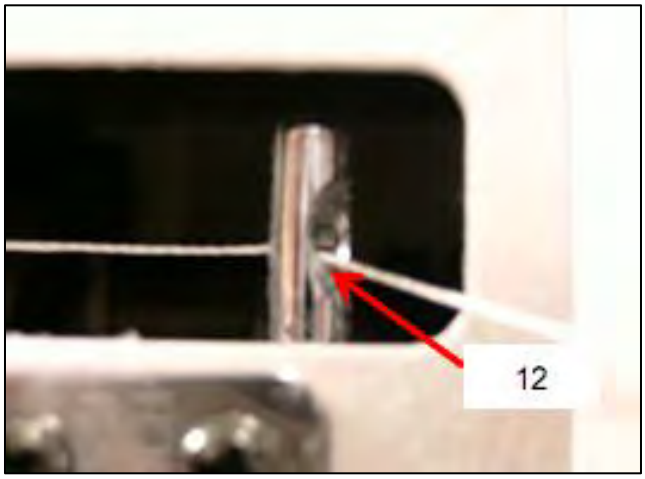

13) Thread through the hole in the casting also located in the access slot on the cover of the looper assembly.

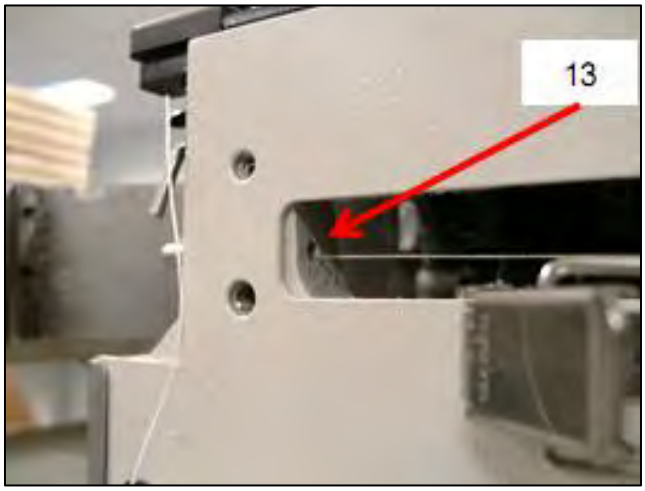

14) Pull the thread out through the tube just before the looper.
15) Thread through the needle guard eyelet on the looper.
16) Thread through the hole in the back of the looper.
17) Thread through the channel on the top side of the looper and up through the eye of the looper.

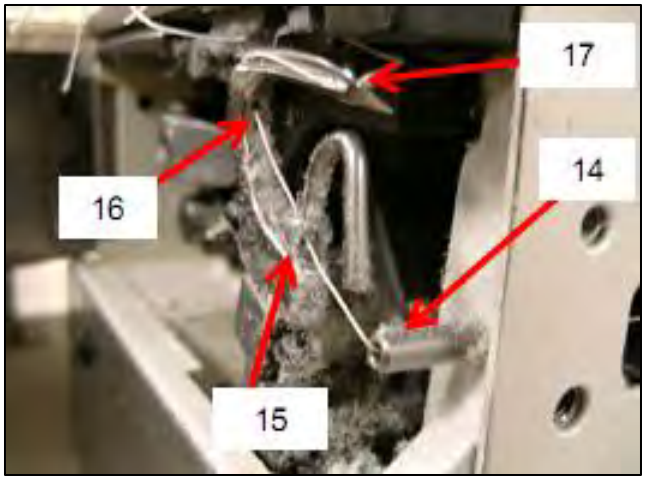

2.4.- Loading Material

1.- Border or Gusset Load

Please follow all safety procedures, turning off power is recommended.

1)Turn power on by pressing the On button on the Main Power Switch.

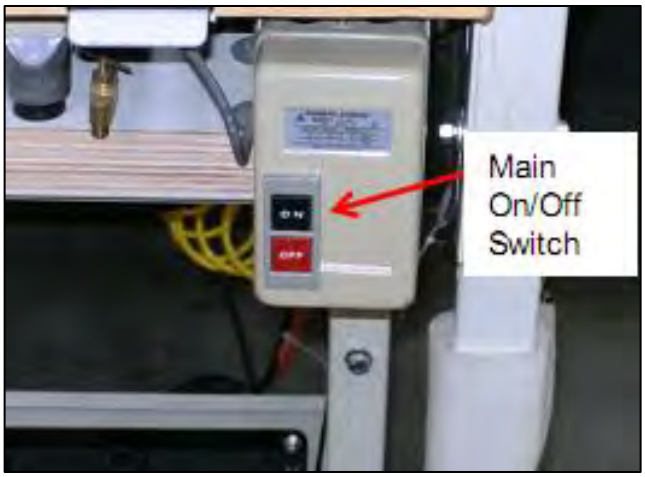

2) Check that the On/Off switch on the Efka motor controller is Orange, and that the Display shows the RPM. If not press the On/Off switch in the down position to turn on.

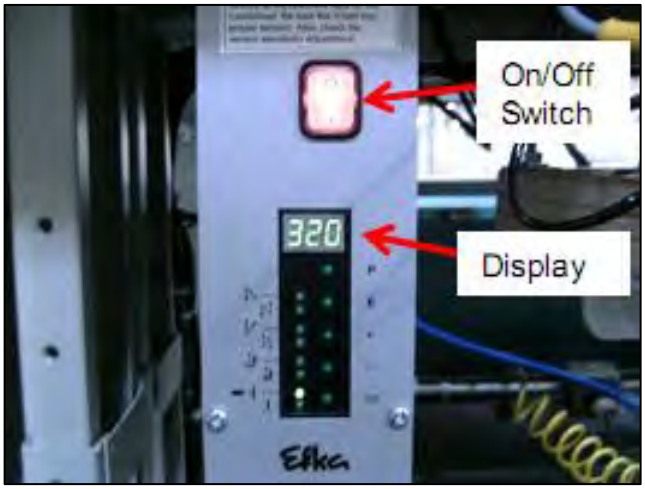

3) Check to make sure that the Power light located on the stepping motor box is on. If these lights are not on then turn the power off at the main switch and notify the plant mechanic.

4) Loosen thumb screw and remove the disk. Place border roll on support rod, for box springs or one sided mattresses place so that the tick side is down as it feeds off the roll, for pillow top gussets place so the tick side is up as it feeds off the roll. Replace the disk and tighten the thumb screw.

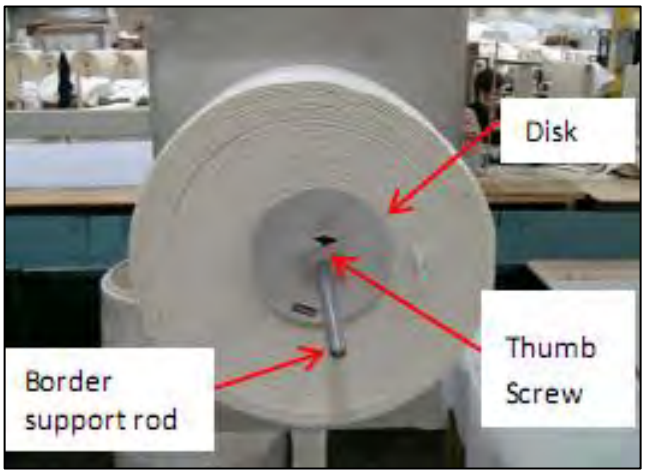

5) Place the material in the guide rods, over the first bar under the second. Move the edge just so that it touches the edge of the material. Loosen the ratchet handle and slide the edge guide in or out as needed.

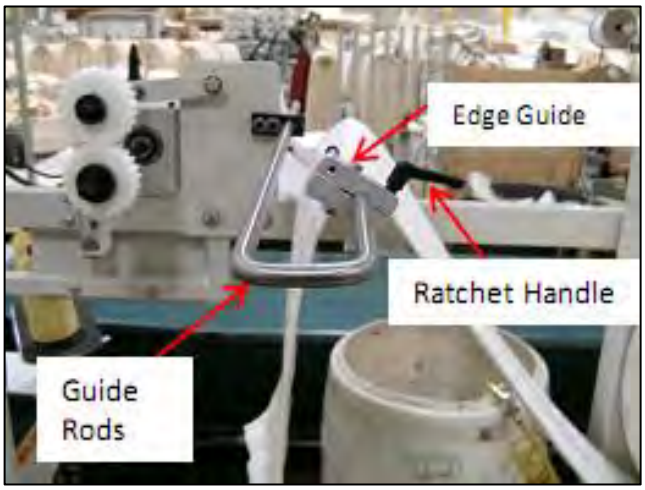

6) The material will next pass through the feed rollers. To get the material between the rollers you must lift up on the feed roller lever.

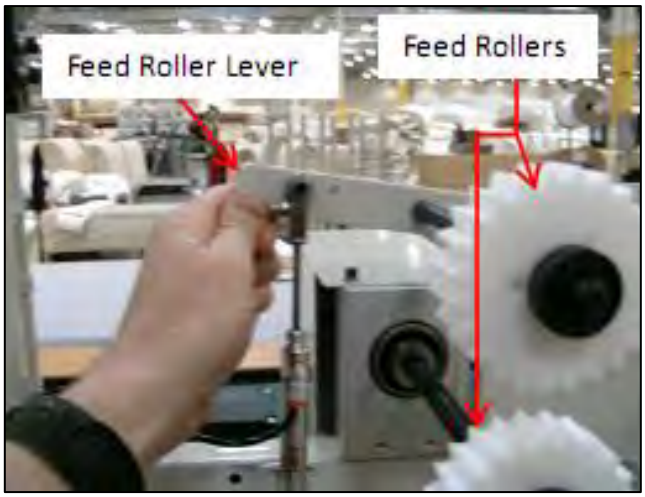

7) The material should be positioned like the picture to the right.

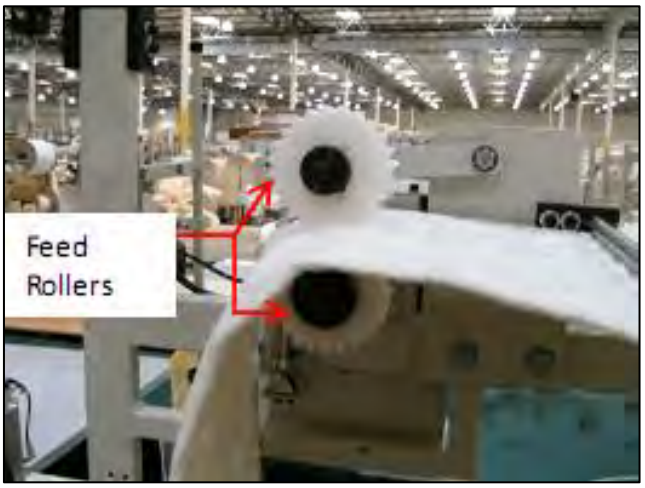

8) Next lift up the border or use your hand to block the border loop eye. The yellow light on the eye will come on either solid or blinking.

9) Step on the left side of the foot pedal and the material will automatically start feeding from the feed rollers.

10) Feed enough material out to get the material over both the guide roller and angled guide roller.

11) Next place the material in the border guide/folder. The folder spacers should be sized as required to fit the thickness of the gusset. Extra spacers can be ordered to fit any thickness gusset from 1/8" to 9/16". Adjust the lower portion of the folder in the same manner.

12) The right side of the border guide/folder has fixed guides for the right edge of the border. The left side has movable guides, there are thumb screws on the backside of the border guide/folder, loosen the screws and slide the guides left or right until they just touch the left side of the border material.

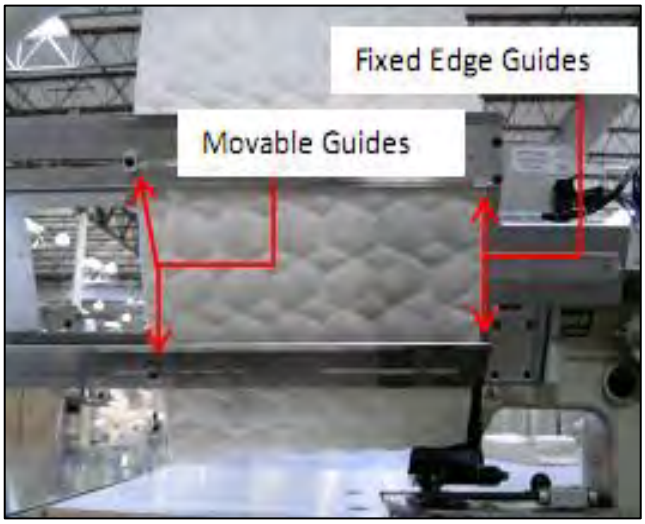

13) Next step on the left side of the foot pedal to raise the foot and puller. Place the border material under the ruffler blade, over the stripper blade, under the foot and puller. Pull enough material so that about half an inch is behind the puller.

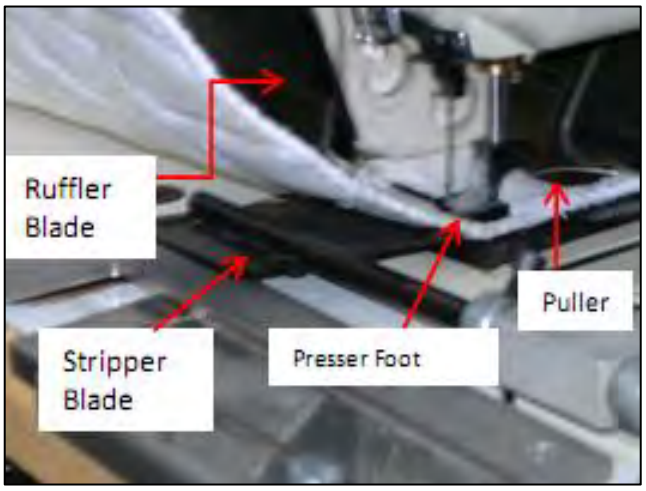

2.- Panel or Non Skid Load

1) Load the PANEL so that the "good" side of the material is up. Start by sliding the panel under the border, top plate, and stripper blade.

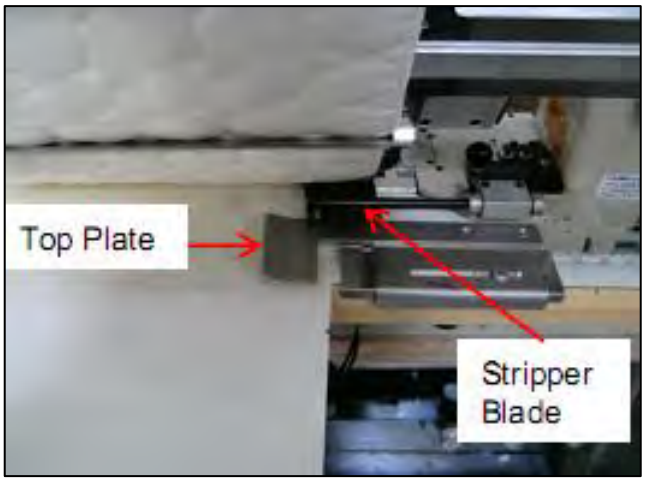

2) To get the panel completely under the top plate, step on the left side of the foot pedal to get the panel tension finger to go down, the foot to go up and puller go up. Slide the panel until it contacts the panel edge guide. Panel Load Procedure

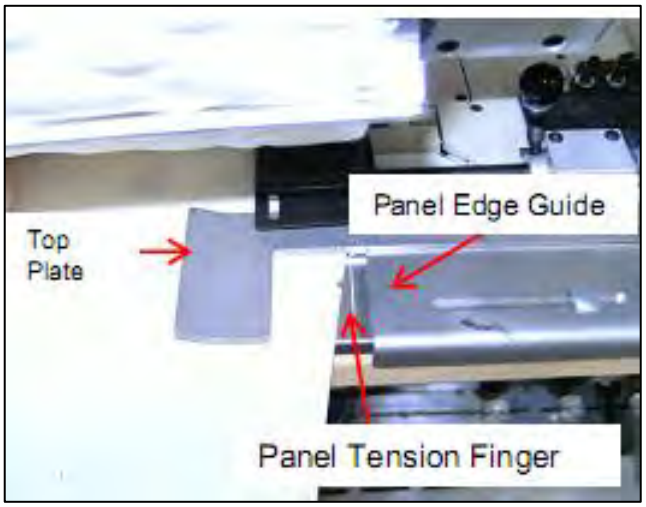

3) Pull the panel forward or backward until the center notch is even or just behind the needle. Make sure that the panel is even with the right edge of the border material.

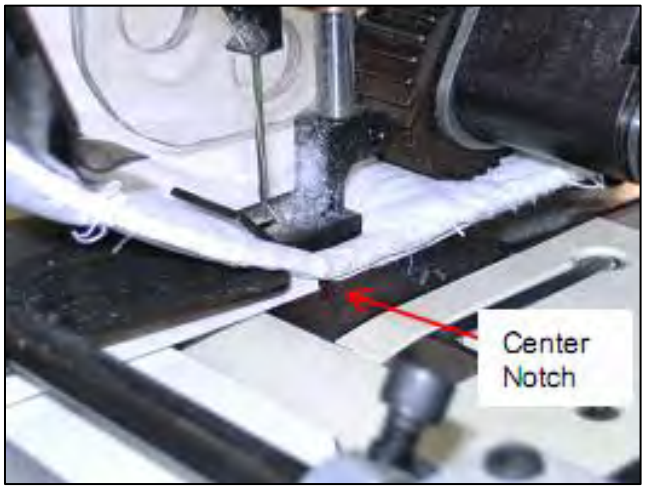

4) Use the wipe switch to lower the border guide/folder.

5) You are now ready to start sewing when the machine looks like picture to the left.

2.5.- Sewing Procedure

Please follow all safety procedures, turning off power is recommended.

1) Start by pressing down on the right side of the Foot Pedal. The sewing head will start feeding both the border and the panel. The operator only has to guide the panel. Do not hold back on the panel; allow the panel tension to do its job.

2) The edge of the panel will move past the cut out in the table for the End Sew Eye to read the reflective tape. Once the eye "sees" the tape then it activates the stop count (thumbwheels 3 and 4 together on the ruffler control box). The sewing head will go into slow stitch speed, the sped of which is set by thumbwheel 2.

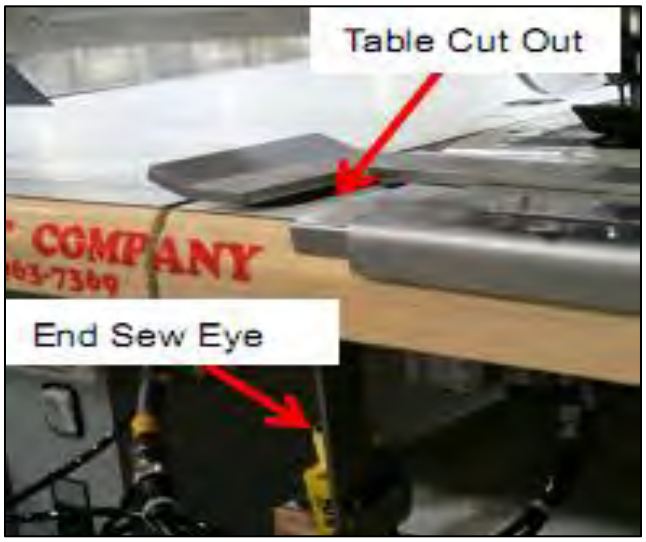

3) Once the stop count has ended the ruffling blade will drop and make the ruffles. The number of ruffles is based on what thumbwheel 5 is set to, in this example it is set to 7 for two ruffles in square or straight sew mode. While the ruffle is being pushed under the foot and sewn the machine is counting the number of stitches set in thumbwheel 6, once this count has been reached the ruffling blade will retract. Once the ruffle/ruffles are complete the sewing head will sew two stitches and then stop. The number of stitches sewn after the ruffle is set by thumbwheel 1, the count is double the number displayed. The Operator will keep the foot pedal pressed during this whole cycle.

4) When the machine stops in square corner mode, the foot and puller will rise, the Needle bar stops down, and the panel tension finger will go down. Operator will still be pressing down on the foot pedal even though the machine is not sewing.

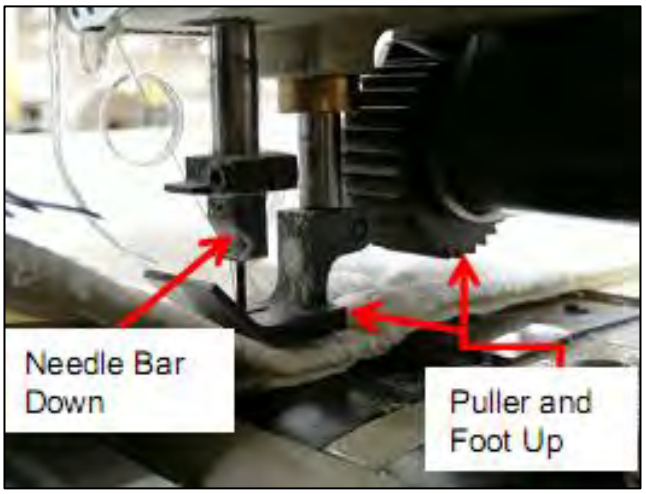

5) The operator will then have to manually turn the panel 90 degrees until it makes contact with the edge guide. Then will let off the foot pedal.

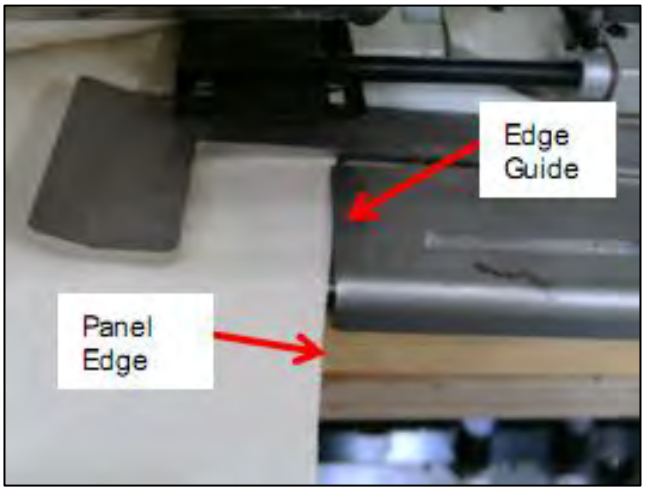

6) Then press back on the right side of the foot pedal. The machine will sew two more stitches, thumbwheel 1 on the ruffler control box. Then the machine will make one more ruffle in the corner. While the ruffle is being pushed under the foot and sewn the machine is counting the number of stitches set in thumbwheel 6, once this count has been reached the ruffling blade will retract. Once the ruffle/ruffles are complete on the second side the sewing head will start sewing at maximum speed until the next corner is "seen" by the end sew eye, then the corner making process starts over. Continue this for all four corners.

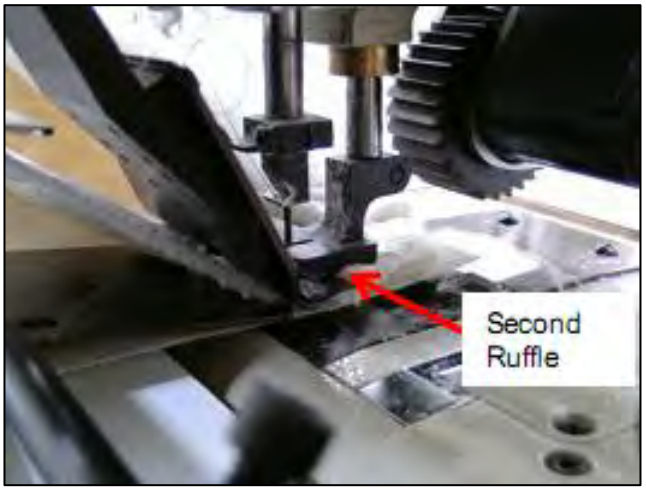

2.5.1.- Closing Procedure Option 1

1) After turning the fourth corner you will need to slow down and stop the machine just as the leading/starting edge of the border gets to the top plate. Fold the leading edge back towards you and sew until the starting stitches reach the edge of the table top, as shown.

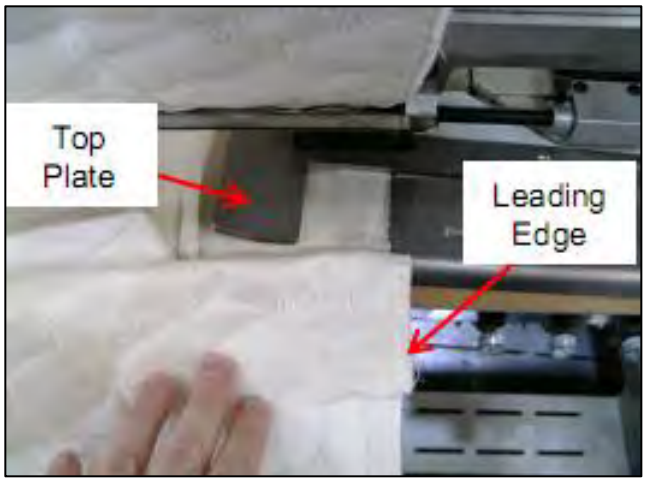

2) Use the wipe switch to raise the folder.

3) Pull out some extra material. 0

De la lí

4) Cut the border material and swing the ruffler assembly out of the way.

5) Pull the panel out from between the panel tension finger and the top plate and pull it over the top of the top plate. Fold the leading edge material towards you.

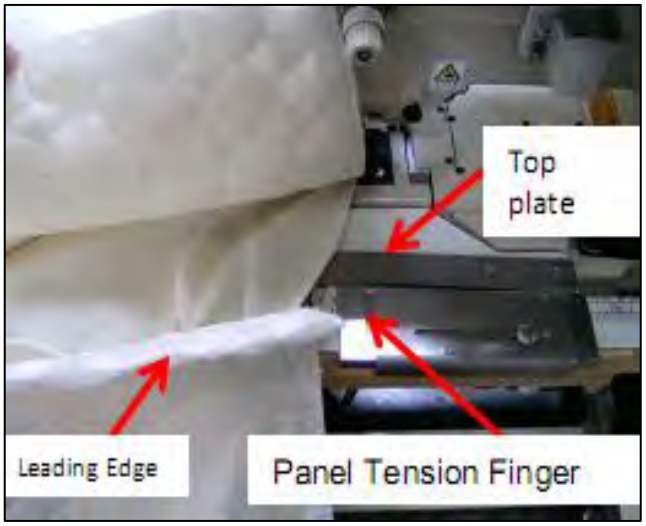

6) Lay the trailing edge of the border material over the leading edge and sew forward until you get close to the center point. Step on the left side of the foot pedal and raise the foot and puller and pull the material out from under them.

7) Lay the panel out flat and pinch the two ends together, finding where they meet at the panel, this is where you will sew for the close seam. You can use a marker and mark where the seam will be for better seam alignment when placing under the presser foot for sewing.

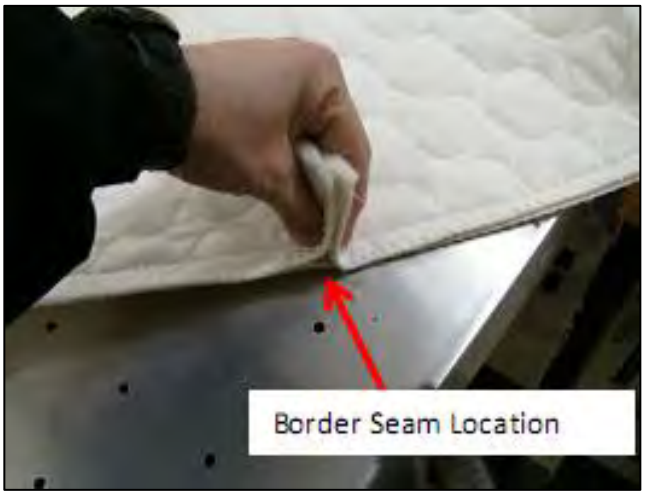

8) Place the border under the presser foot, by stepping on the left side of the foot pedal. Line up the location or mark for the seam with the needle. Use the right side of the foot pedal to sew the seam closed. You can insert a law label in when you do this operation.

9) Depending on your plants specs you may have to sew this seam twice. Just repeat the previous step.

10) Open the extra material, like a book and lay them flat. Raise the foot and puller by stepping on the left side of the foot pedal and slide the material under them. Line up the needle with the existing sew line and sew across the seam.

11) You should have a completed cover when the seam is closed.

2.5.2.- Closing Procedure Option 2

1) After turning the fourth corner you will need to slow down and stop the machine just as the leading/starting edge of the border gets to the top plate.

2) Use the wipe switch to raise the folder.

3) Pull out some extra material.

4) Cut the border material and swing the ruffler assembly out of the way.

5) Pull the panel out from between the panel tension finger and the top plate and pull it over the top of the top plate. Fold the leading edge material towards you.

6) Fold back the leading edge of the border material as shown.

7) Lay the trailing edge of the border material over the folded leading edge.

8) Use the right side of the foot pedal and Sew across until you get to the existing sew line. Step on the left side of the foot pedal and raise the presser foot and puller and remove the material from under them.

9) Keeping the leading edge folded; so that you have three ply of material.

10) Use the left side of the foot pedal and raise the presser foot and puller and place the material under them as shown.

11) Try to maintain the same amount of fold for the leading edge or the seam will not come out straight. Use the right side of the foot pedal and sew down to the bottom edge of the material. You may insert a law label if needed. You can chain off on this machine but it needs to stay under the puller and at a slower rpm.

12) You should have a completed border with the seam closed as shown in the
picture to the left.

2.6.- Ruffle Size Adjustments

To adjust the size of the ruffle, turn the adjustment knob located on the front of the ruffler assembly. Turning the knob clockwise makes the ruffler smaller, turning the knob counter clockwise will make the ruffle larger.

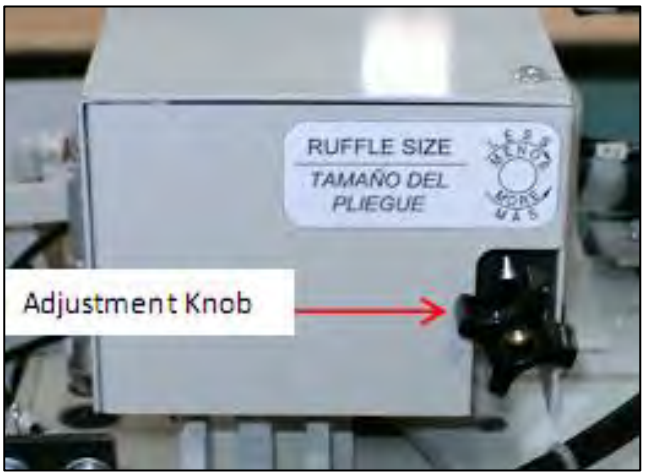

There is a scale located on the side of the right side of the ruffler assembly. The pointer will move as the knob is turned, the smaller the number the smaller the ruffle, the larger the number the larger the ruffle.

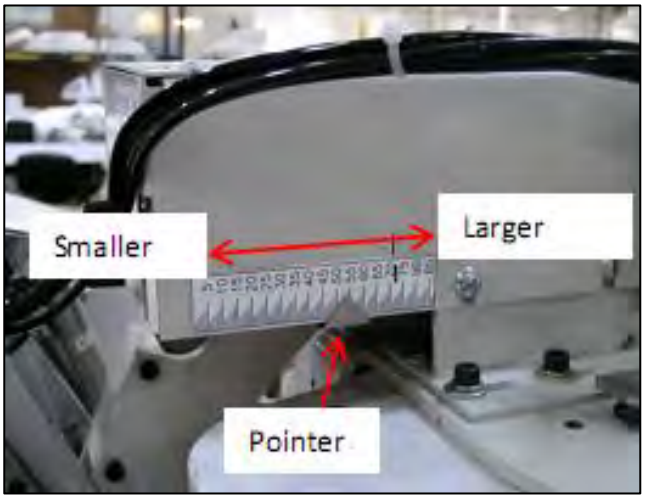

2.7- Sizing the Panel

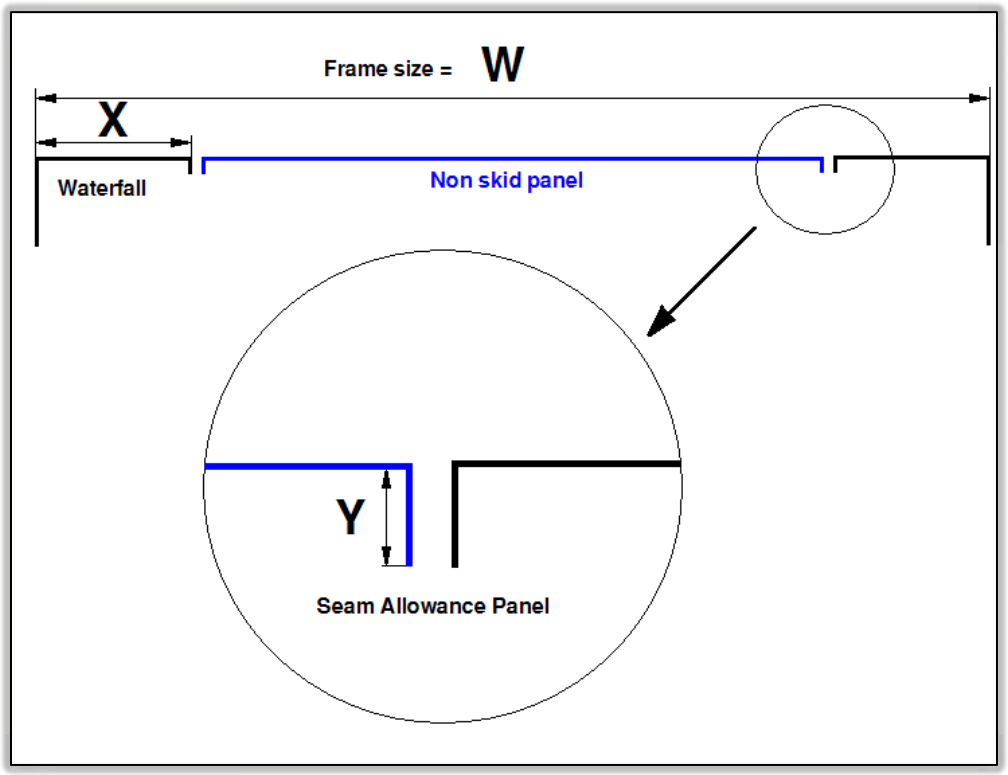

Panel size:

W – (2 x X) + (2 x Y)

Example:

Frame size = 80”
Waterfall = 3”
Seam allowance panel = ½”

Panel size = 80” – (2x 3”) + (2x ½”)
Panel size = 80” – 6” + 1”
Panel size = 75”

2.7.1.- Flow Chart Sizing Box Springs (Page 1)

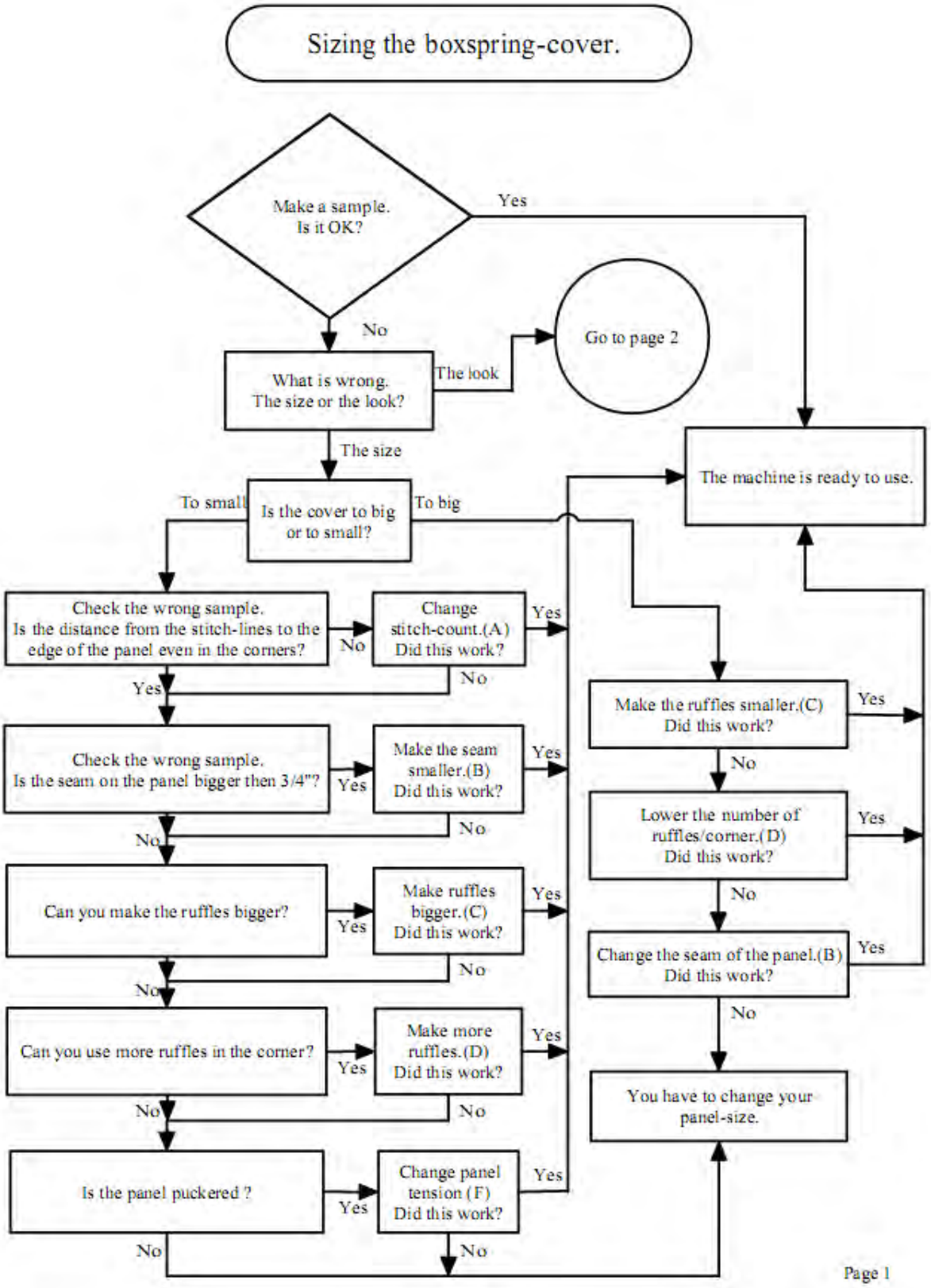

Explanations Flow Chart Sizing Box Springs (Page 1)

A – Changing stitch -count.
The number of stitches after the panel uncovers the photo -eye.
The higher the number the wider the corner will end.
Change the number of stitches by using the push -buttons at the front of the control-box.

B – Changing the size of the panel -seam.
The seam can be changed by moving the guide on the table -top. (Bigger/right – Smaller/Left)
If changing the seam most of the time you need to change the stitch -count too. (See A)

C – Changing the ruffle size.
The ruffle size can be changed by turning the thumb -wheel at the front of the box at the top of t
sewing -machine.
On the side of the box there is a scale. (Higher number/ Bigger ruffle)
If changing the ruffle -size most of the time you need to change the stitch -count too. (See A)
If changing the ruffle -size sometimes you need to change the stitches per ruffle. (See E)

D – Changing number of the ruffles in the corner.
The number of ruffles can be changed by changing the number on the control -box. (2nd
from r
Numbers 1 -6 are round corners.
Numbers 7 -9 are square corners, were 7 = 2 ruffles, 8 = 4 ruffles and 9 = 6 ruffles.
If changing the seam most of the time you need to change the stitch -count too. (See A)

E – Changing the stitches per ruffle.
To change the number of stitches per ruffle, change the number on the control -box. (1 st
from r
- Important: Don't go to high with the number so the ruffle -blade is hitting the foot!!!

F – Changing the panel -tension.
Changing the panel-tension can be done by changing the air -pressure with the regulator.
The air-regulator is located under the table at the frame.
The tension "Finger" is located in front of the sewing -machine on the table -top.
Too much tension will give a wrinkled border. Not enough tension will give a wrinkled panel.

2.7.2. Flow Chart Cover Adjustments (Page 2)

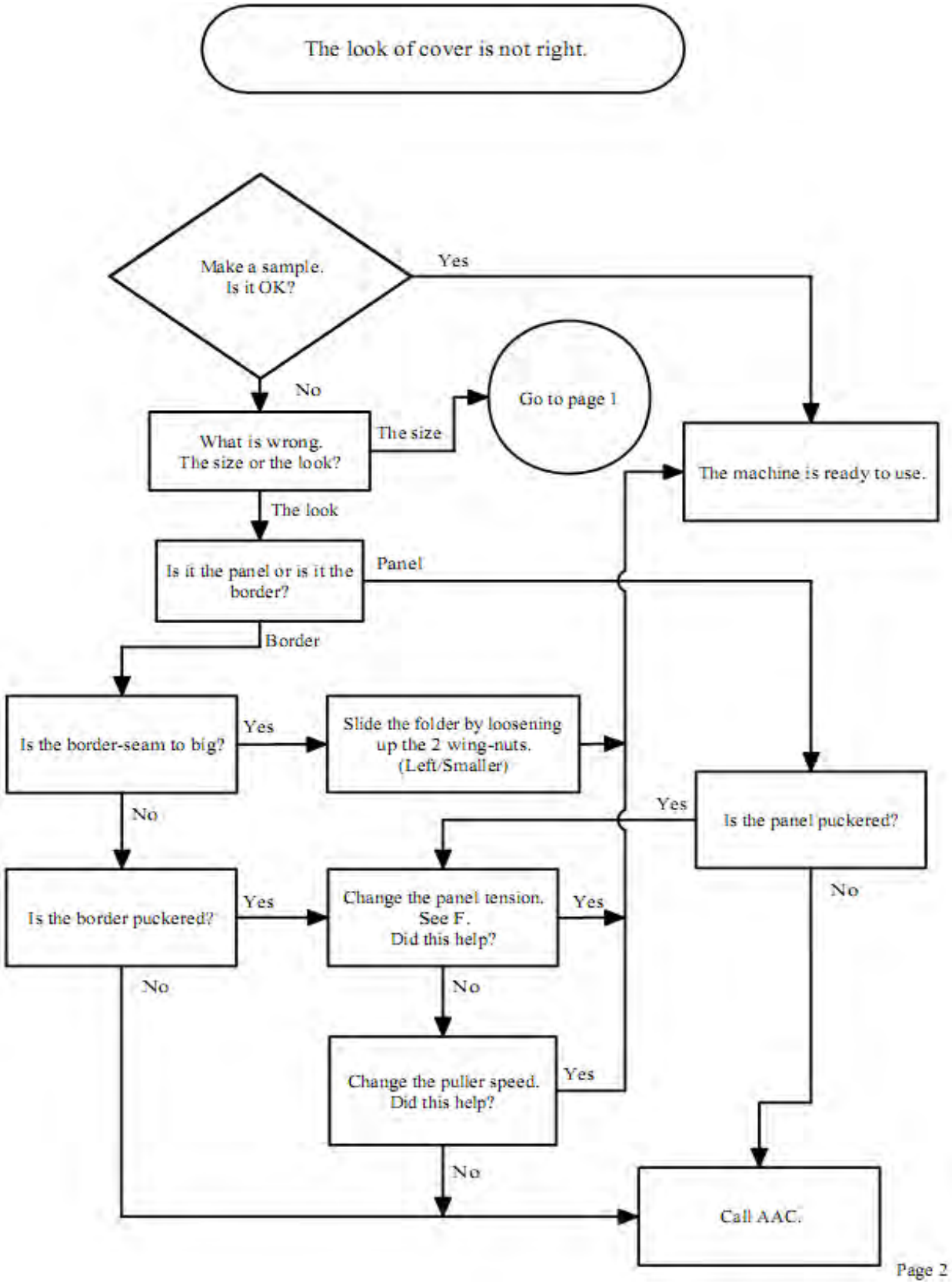

Problems	Solutions
The cover fits the corners ok but the border between the corners is baggy. 	Run another panel and check the sizing of it. If it is still baggy then reduce the air pressure for the panel tension, see 3.3 Air Regulators Decrease the puller pressure, see 3.3 Air Regulators .
The corners are too tight, hard to pull on or sunk in. 	Rerun a cover and check the corners on it, if the problem still exists then increase the size of the ruffle Increase the number of ruffles if permitted..
Cover is too small, won't fit on the spring unit. 	Rerun cover and check size if size is too small do the following: 1) Check the cut panel size. 2)Add more pressure to the panel tension. 3)Increase the size of the ruffle 4)Increase the puller spring pressure. 5)Lower the feed dogs, Keep in mind it might take a combination of these adjustments to correct the problem.

2.8.- Maintenance

a.- Daily Maintenance

Open up all the covers on the sewing head and blow out the lint from the machine.

Wipe all the electric eyes off with a soft nonabrasive cloth.

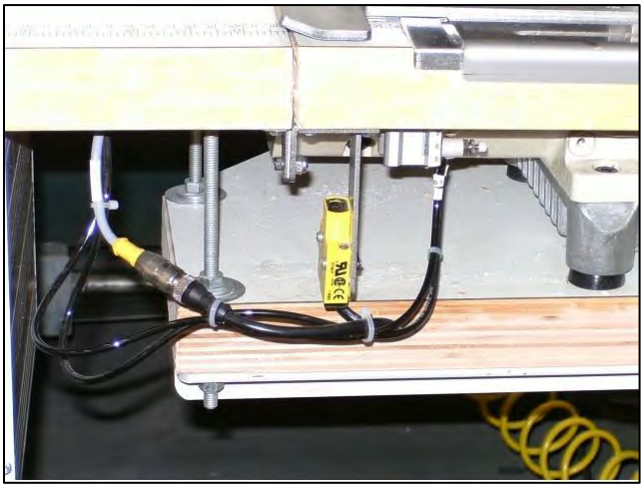

Check for and clean threads from around the puller housing and puller wheel.

3.-TECHNICAL MANUAL

It is important that the machine operator read this manual and is familiar with all the functions and safety concerns of the unit before operating.

3.1.- Individual Components

3.1.1.- Border Guide Rod Assembly

The border guide rod assembly is located right above the sewing head. It consists of two PVC covered rollers, the back one is installed parallel with the floor and the front one is angled just above the sewing head. The angled roll is set so that the border material runs straight through the border guide/folder while the machine is sewing. Adjustment of the angled roll depends on the width and type of border being sewn. Adjustment is made with the ratchet handles.

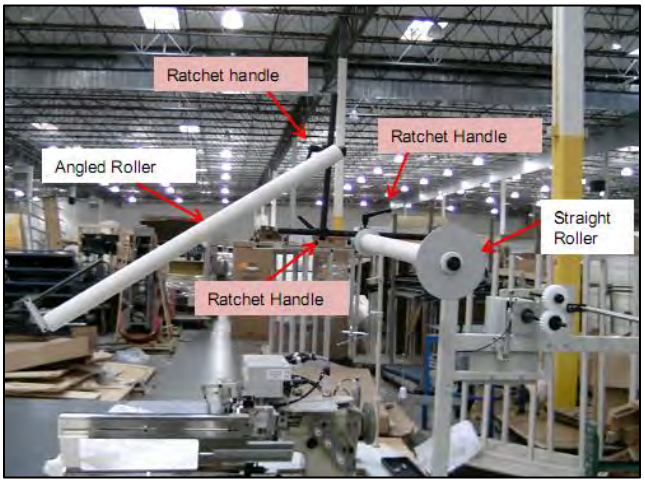

3.1.2.-EdgeGuide/Panel Tension Assembly

The air cylinder (4) located under the table pushes the panel tension finger (2) up until it contacts the bottom of the top plate (3). The amount of pressure is determined by the middle pressure regulator on the regulator assembly, and is set according to the type of panel being sewn.

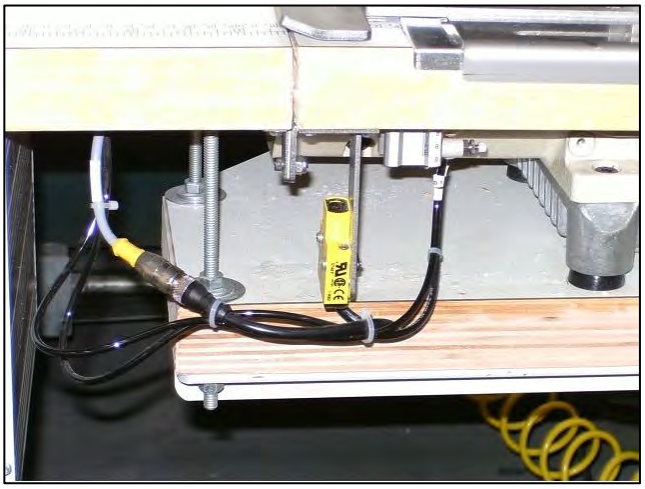

3.1.3.- Ruffler Assembly

The ruffler assembly is mounted to the top of the sewing head on a swing out bracket (14). The ruffler drive is located under the cover (1). The border material guide/folder (2) is mounted to the ruffler arms by the nut plate (3).

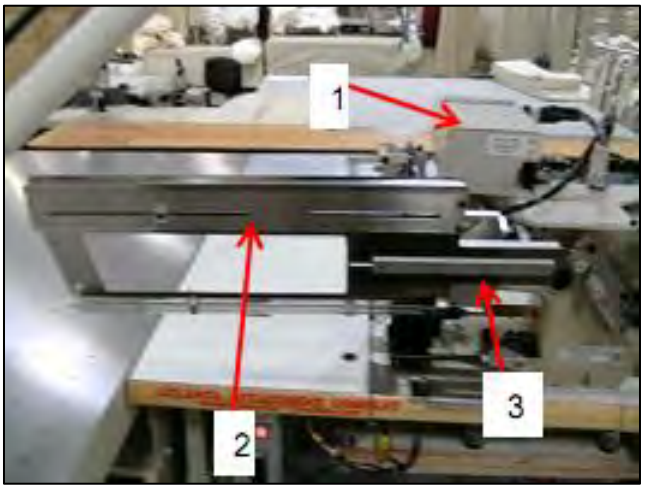

Also mounted to the ruffler arms are the ruffler cylinder (4) which moves the ruffler blade up and down, the border guide/folder lift cylinder (5) which is activated by the wipe switch located on the front right of the table and the ruffler blade (6).

The front of the ruffler drive assembly has the ruffle adjustment knob (7), used to adjust the size of the ruffle.

Under the cover of the ruffler drive assembly there is the stepping motor (8), which is controlled by the stepping motor box located under the table. The ball screw assembly (9) which moves the ruffling blade in and out, and the ruffler arms(10).

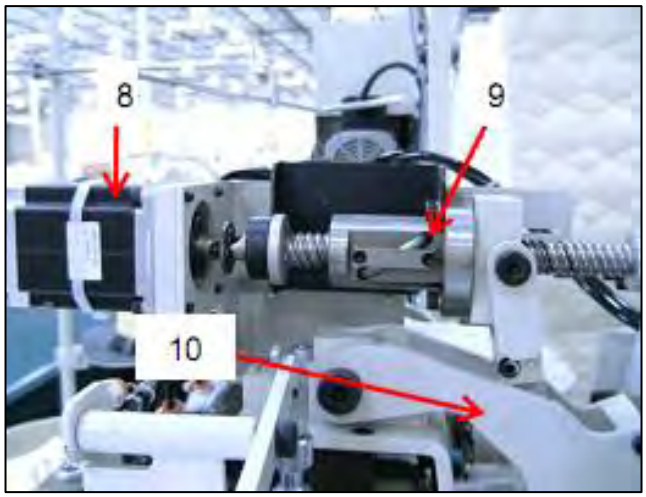

Also located under the ruffler drive assembly cover there is the flag (11) which is read by the home proximity sensor (12) and the out sensor (13). Everything is mounted to the swing out bracket (14).

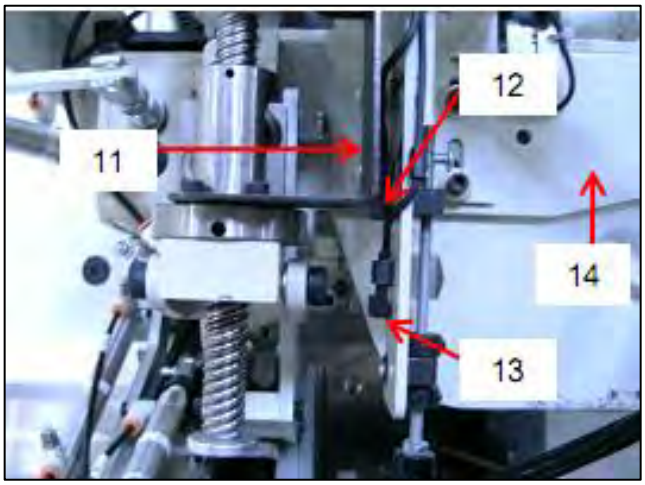

Located on the back of the swing out bracket (14) there is a lock pin (15). This locks the swing out bracket in place when the border guide/folder (2) is down.

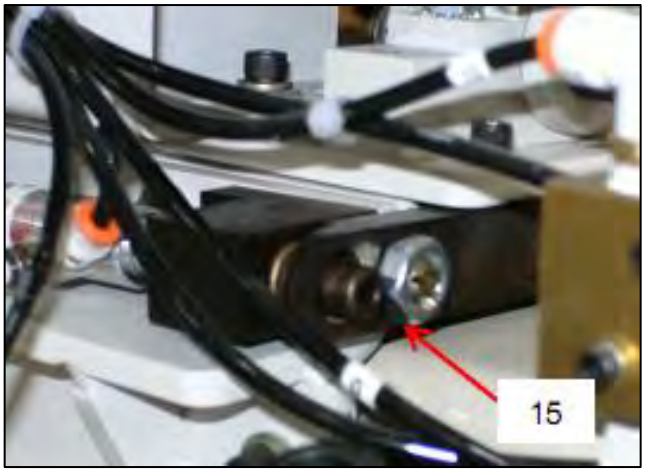

To the right of the ruffler drive assembly is the swing out bracket closed proximity switch bracket (16). The proximity switch is mounted under the bracket and is used to detect when the guide/folder is in the closed position.

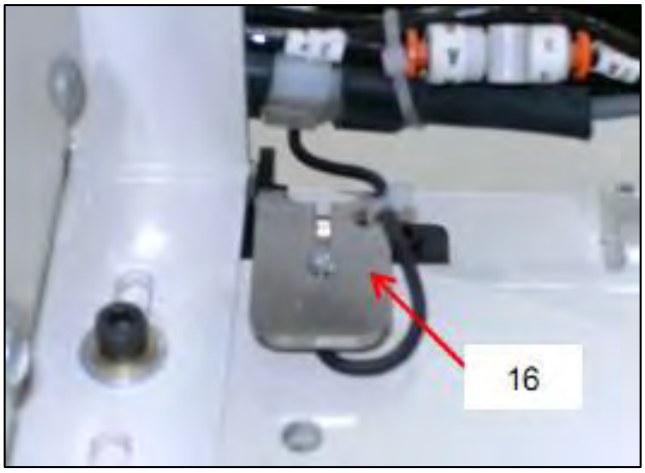

The stripper blade (16) is part of the ruffling assembly and is mounted to the bed plate of the sewing head on its own swing out bracket (17). The stripper blade allows the ruffling blade to pinch the border material between it and the stripper blade and push the material under the foot without pleating the panel. 2.30

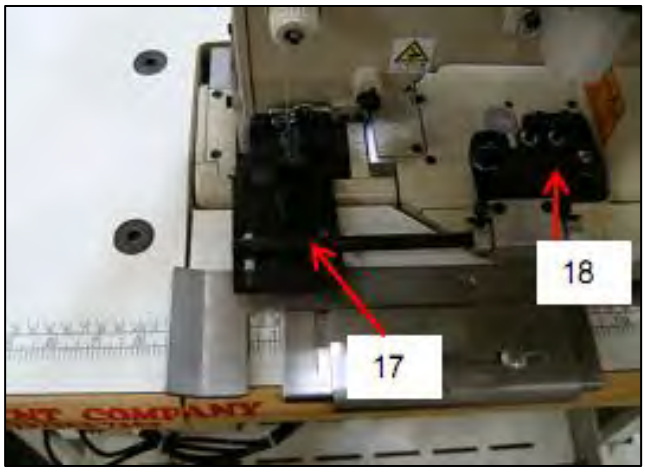

3.1.4.- Stripper Blade

Set the front edge of the stripper blade so that it is as close to the presser foot that still allows the stripper blade to swing out. Set the height of the stripper blade high enough that it doesn't pinch the panel between it and the sewing head when the ruffler blade comes down.

To adjust the distance of the front edge of the blade, loosen the two button head cap screws located on the bottom side of the stripper blade support rod. Slide the blade in or out as needed and tighten the two screws.

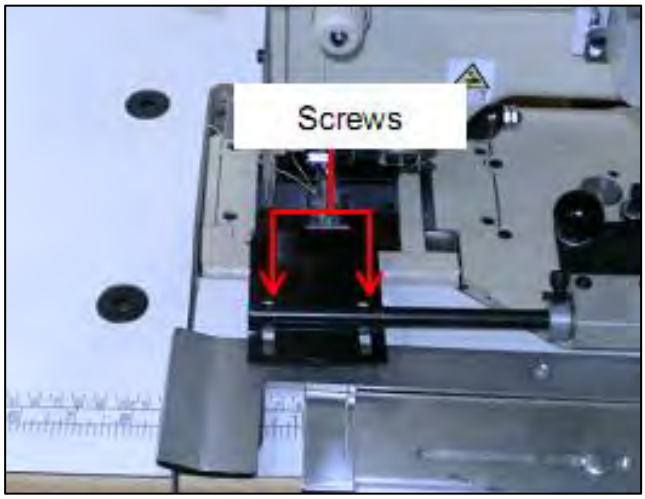

To adjust the height of the stripper blade loosen the socket head cap screws resting against the pins on the mounting block. Move the blade up or down as needed, rotate the collars until the socket head cap screws are resting against the pins and tighten the screws.

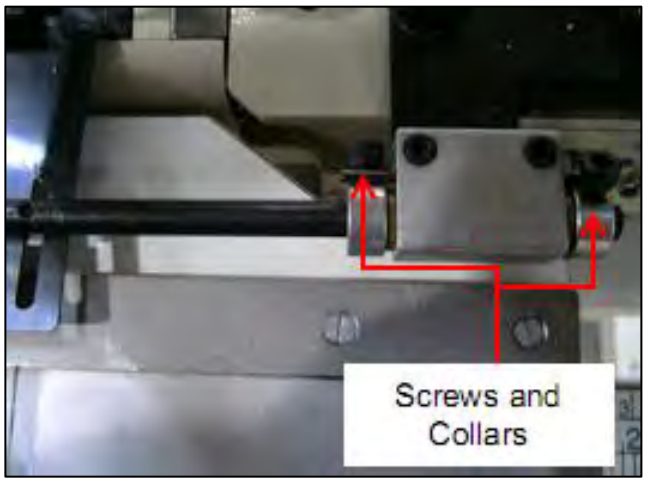

3.1.5.- Ruffler Blade

Loosen the two cover screws located on the right side of the ruffle assembly. Remove the cover by lifting up.

Locate the two proximity switches to the right of the ball screw. The back sensor is the Home sensor and the front sensor is the ruffle Out sensor.

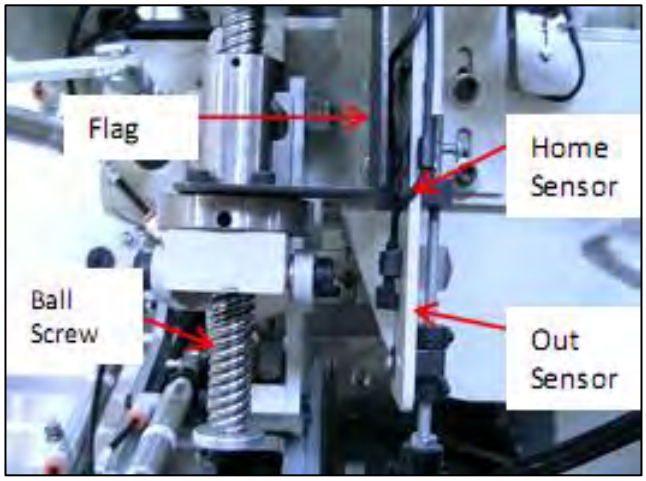

Put the Auto/Manual toggle switch to the manual mode, then press the Ruffle button once.

After the manual button is pressed the ruffle blade will move to the down position, on top of the stripper blade.

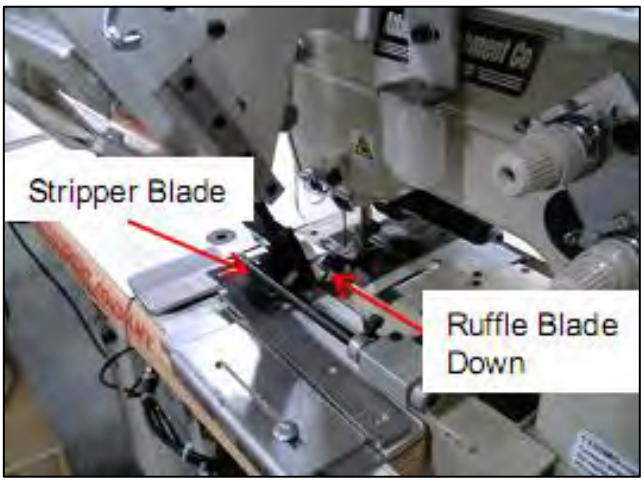

Tap on the right side of the foot pedal.

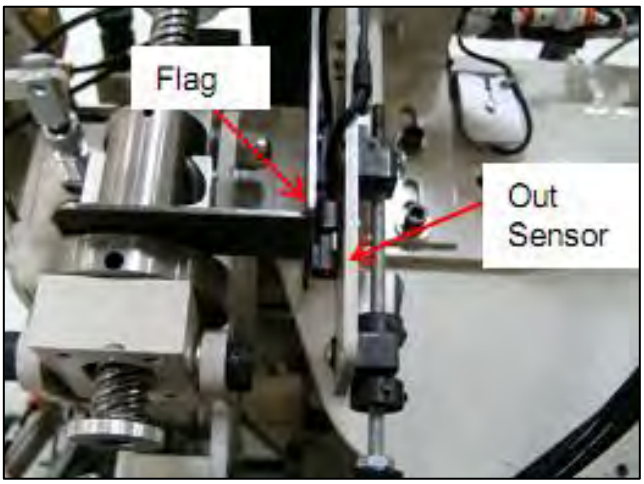

The stepping motor will move the flag to the out sensor and stop. There should be a red L.E.D that lights up on the sensor when the sensor reads the flag. If not then the flag is too far away from the sensor or the sensor is unplugged or bad.

The teeth of the ruffling blade should either be even with or no more than 1/8 inch past the needle.

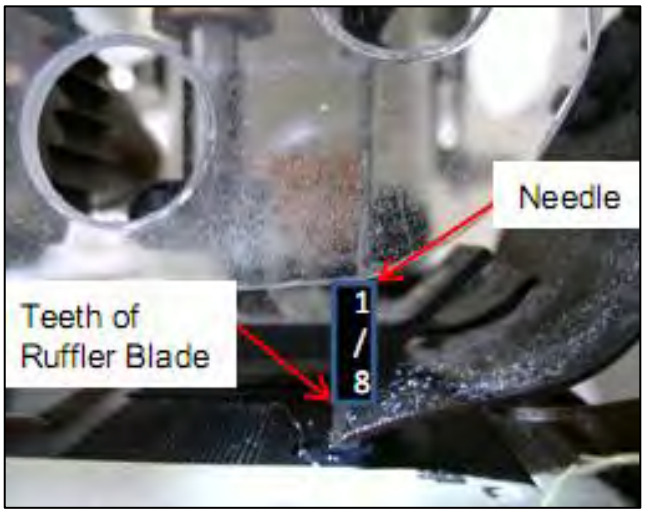

To adjust, loosen the proximity sensor screw and slide the sensor left or right in the slot.

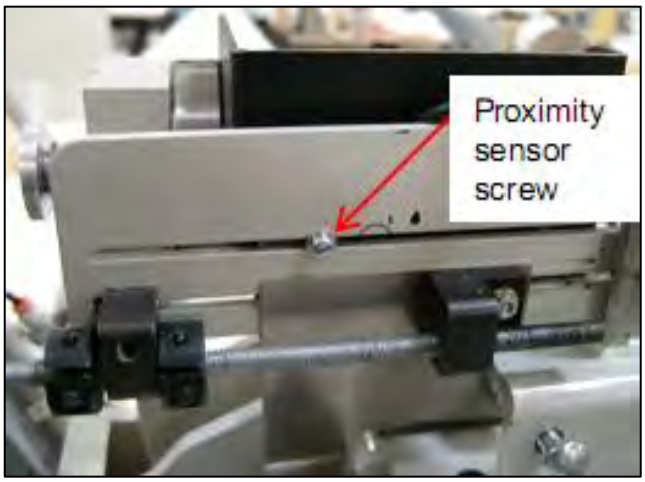

Press the reset button once to reset the ruffle blade back to the home position. Repeat steps to check settings if any changes were made. When done be sure to put the Auto/Manual switch back to the AUTO position before the operator starts sewing.

3.2 Sewing Head

3.2.1.- 1335MG (Yamato 2002)

1.- Individual components

The front of the sewing head has the needle and looper thread tension disk (1) and the needle thread pre-tension (2). The needle thread pre-tension (2) keeps tension on the needle thread while turning the panel in square corner mode. The needle thread pre-tension (2) has a release pin on it that releases, by separating the tension disks apart, when the border guide/folder is up.

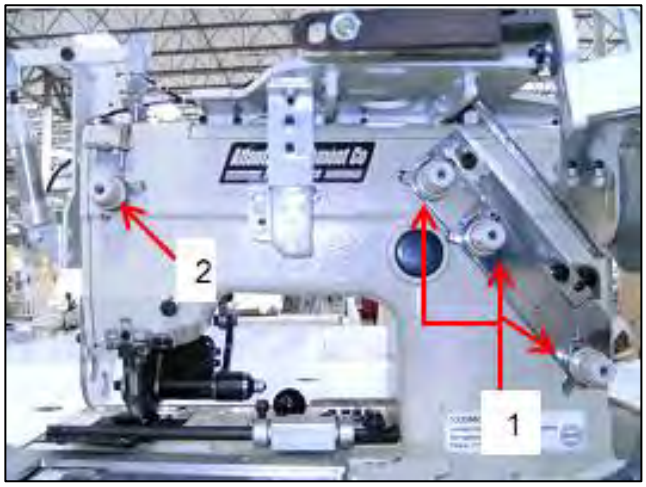

The bed plate has the stitch length adjusting button (3), the stripper blade mount bracket (4), the presser foot (5), and the throat plate (6).

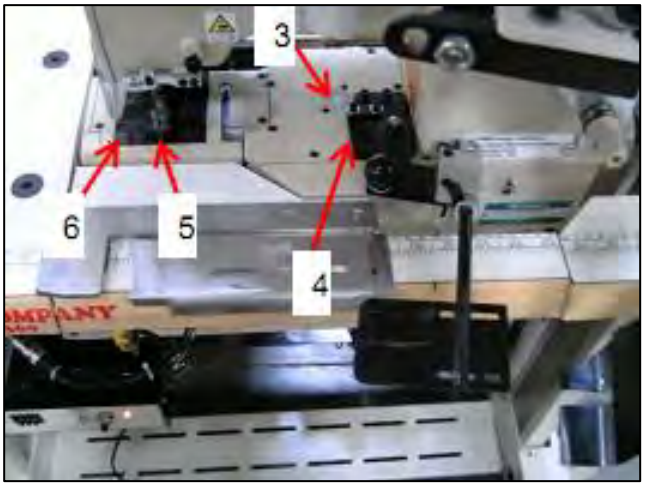

The back of the sewing head has the manual puller up push button (7), the puller (8), the puller lift cylinder (9), the lock pin cylinder (10), and the foot lift cylinder (11).

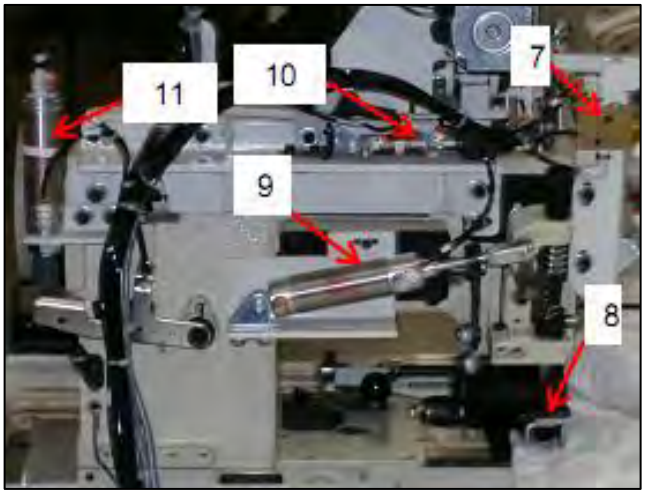

The presser foot cylinder works only during the straight sew of the panel. When the machine is ruffling the air pressure is turned off to this cylinder and the foot pressure is just the spring pressure from the spring located inside the sewing head. The spring pressure is set with as little spring pressure as possible.

The panel tension works by pinching the panel between it and the top plate. This is adjusted based on the type of panel being sewn, 15 psi is normal. If the panel gathers then there may be too little tension on it, if the border gathers then there may be too much tension on it.

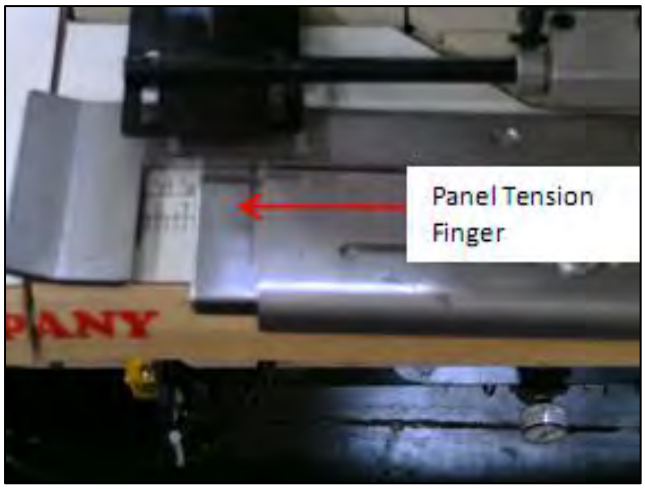

2.- Looper Timing

With the looper (1) all the way back and the needle (2) all the way down the distance between the point of the looper and the center of the needle should be 3/16 inch.

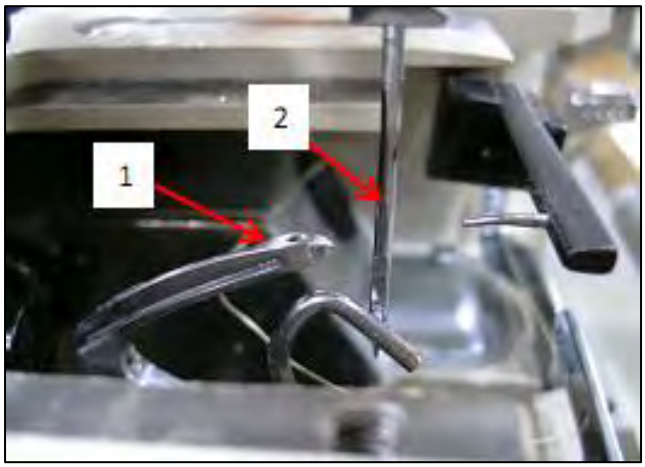

This adjustment is made by loosening the socket head cap screw (3) and moving the looper forward or back until the 3/16 inch measurement is made.

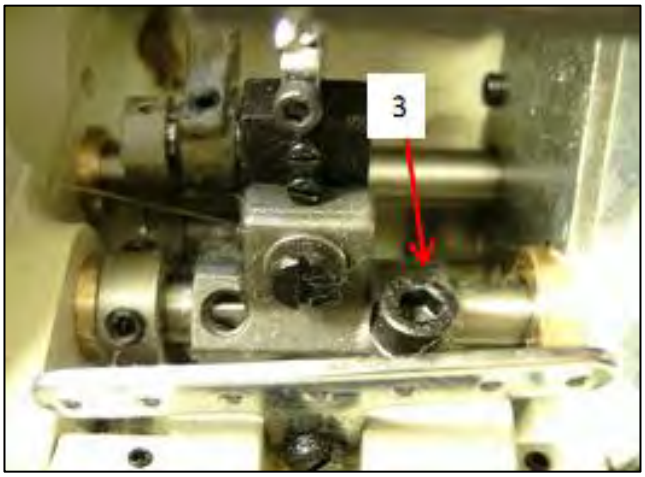

Rotate the Hand wheel until the point of the looper (4) is even with the center of needle. The looper point should come into the midpoint of the scarf of the needle (5) .

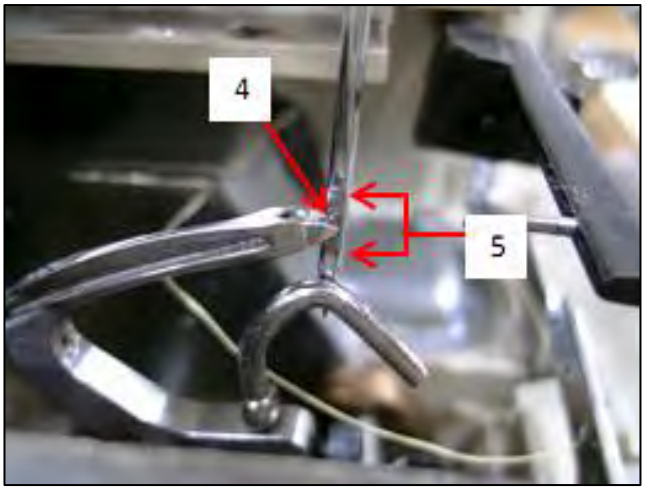

In order to get the correct height of the needle in relation to the looper point access the needle bar clamp screw by removing the rubber plug on the face plate of the sewing head (6). Loosen the screw and move the needle bar up or down , be sure to keep the needle chuck straight.

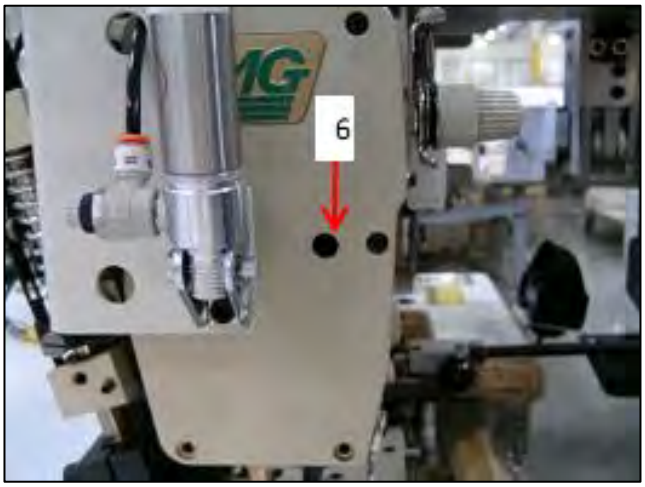

The angle of the looper blade (7) in relation to the looper holder should be set to 90 degrees. The clearance of the looper point to the needle (8) should be from 0 to .05 mm.

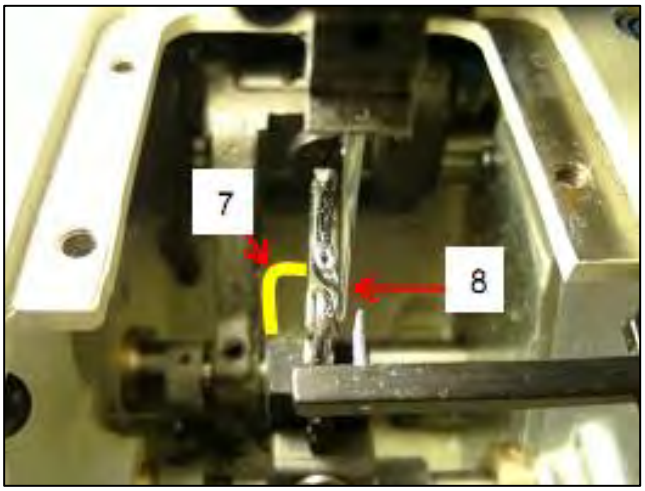

The angle of the looper blade is set by loosening the two slotted screws (10) and turning the looper until the 90 degree setting is achieved. The looper point to needle clearance is set by loosening the slotted hex head screw (11) and sliding the base left or right.

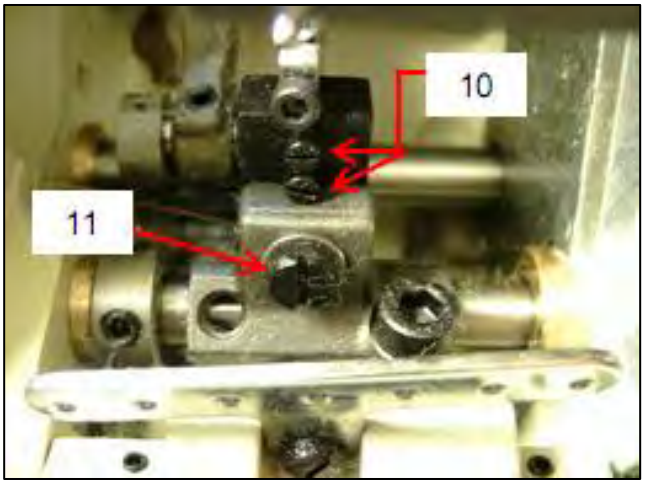

Adjust the needle guard so that it pushes the needle 0 to 0.05 mm. This is done by loosening the socket cap screw on the looper and turning the needle guard.

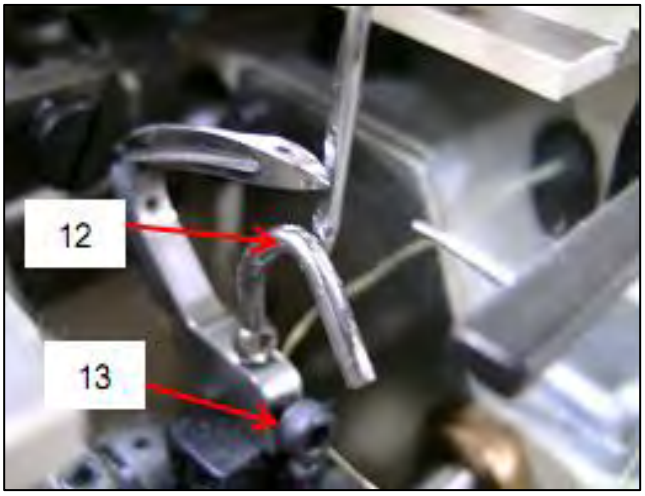

The left to right clearance of the spreader point (14) should be set so that when the looper is moving forward the point of the spreader is 0 to 0.1 mm to the left of the looper.

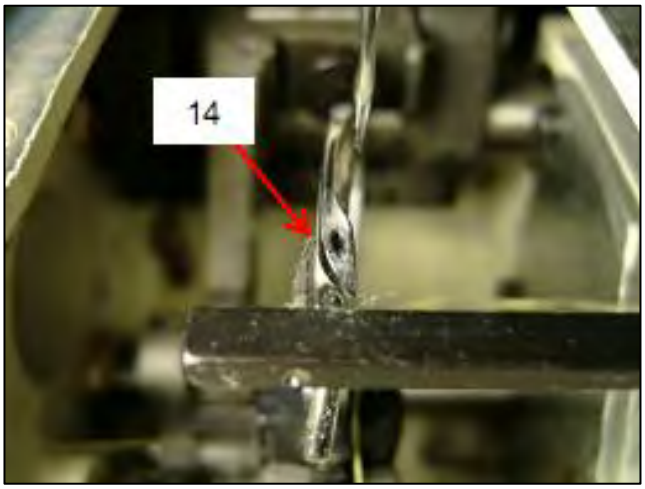

The height of the spreader is set so that as the spreader is moving to the right and passes over the looper it clears the top of the looper by 0.1 to 0.4 mm.

Both the left/right adjustment and the height adjustment of the spreader point is made by loosening the two set screws (15) on the spreader holder (16) and moving the spread left or right, up or down as needed.

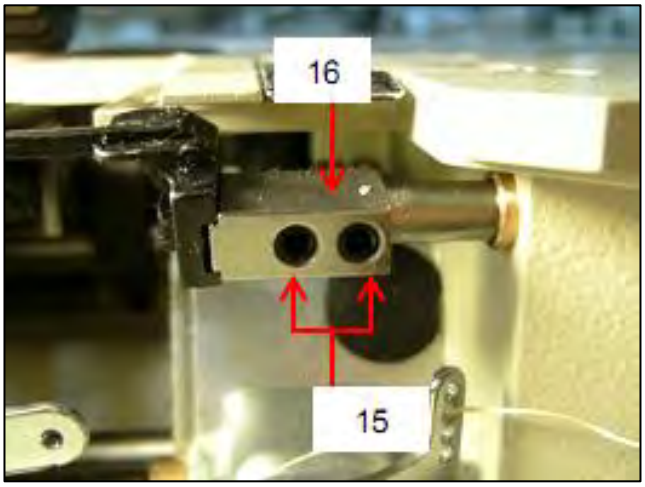

When the needle moves down, the clearance of the spreader point to the front of the needle should be 1.8 to 2.0 mm (17). With some Kevlar threads this clearance may have to be closer, 1.5 to 1.0 mm, to prevent the looper thread from slipping off of the spreader before the needle enters the triangle. When using the tighter clearances turn the Hand wheel to make sure that the spreader point, when moving to the left, does not hit the needle and that it doesn't pick up the needle thread as it passes over the looper, when moving to the right.

The clearance of the spreader point to the needle (17) is made by loosening the screw (18) on the spreader holder and moving the spreader forward or backward as needed.

The height of the teeth of the feed dog (19) should be set to ½ of a tooth out of the throat plate at the feed dog's highest position.

To adjust the feed dog height, remove the throat plate, then loosen screw (20).

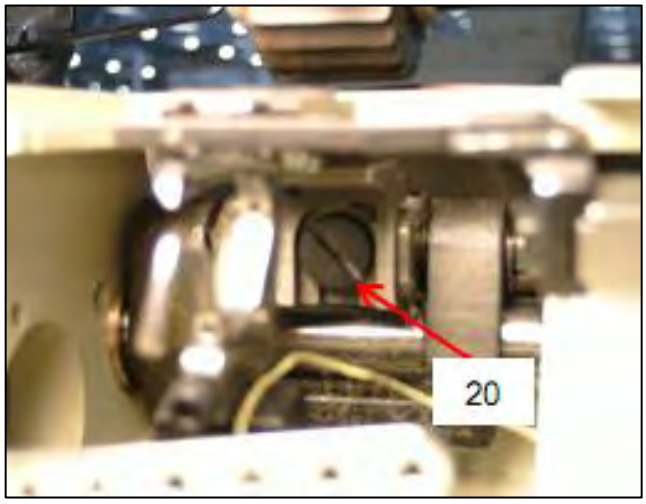

Then loosen the nut (21) and turn the screw (22) on the back of the feed dog holder to raise or lower the feed dog as needed. Tighten the nut (21), then tighten screw (20). Replace the throat plate. (feed dog does not have to be removed when making this adjustment)

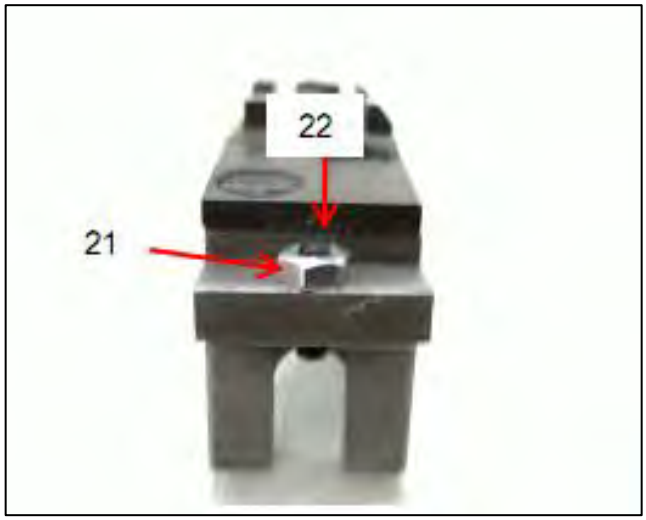

3.- Stitch Length

Start by pressing on the feed dog regulating button (1) located on the bed of the sewing head. Push until the button stops going down.

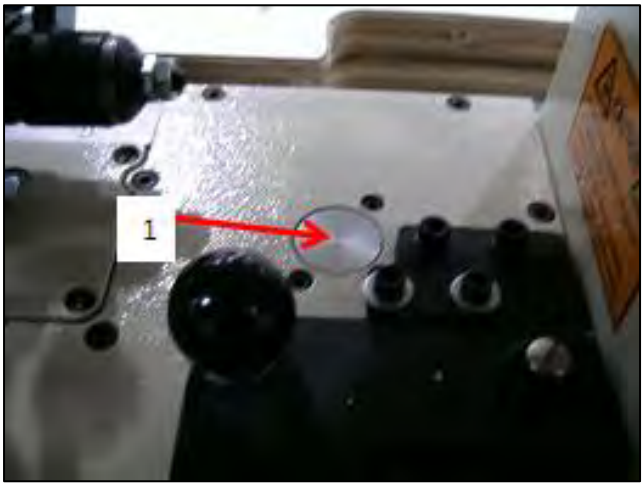

Rotate Hand wheel (2) counter clockwise until the feed dog regulating button catches in the slot on the eccentric (not shown), and the button drops down further.

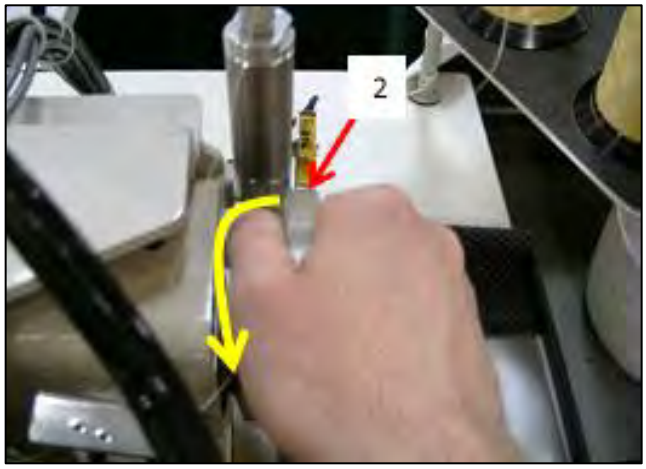

With the button still pressed, rotate the Hand wheel until the desired stitch length number (3) on the Hand wheel lines up with the brass marker (4) located on the front right side of the sewing head, release the button. (The numbers on the Hand wheel range from 2 to 6, this indicates the length of a single stitch, in mm, not the number of stitches per inch.)

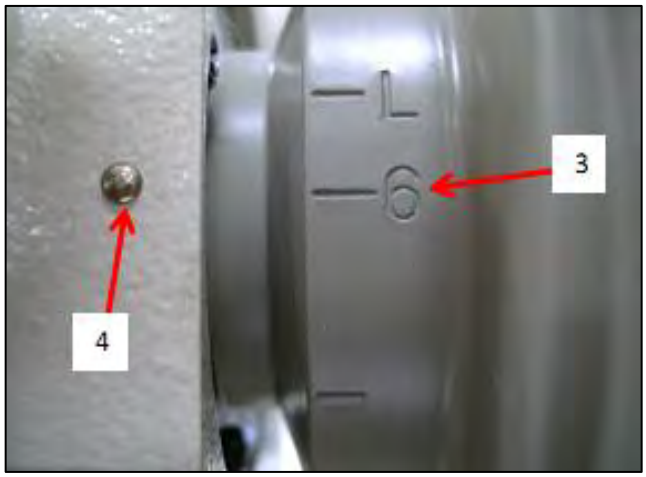

Checking the Stitch Length

Start out by sewing with the puller up. To do this press and hold the manual puller lift button on the top left side of the sewing head and sew a scrap piece of material through the machine.

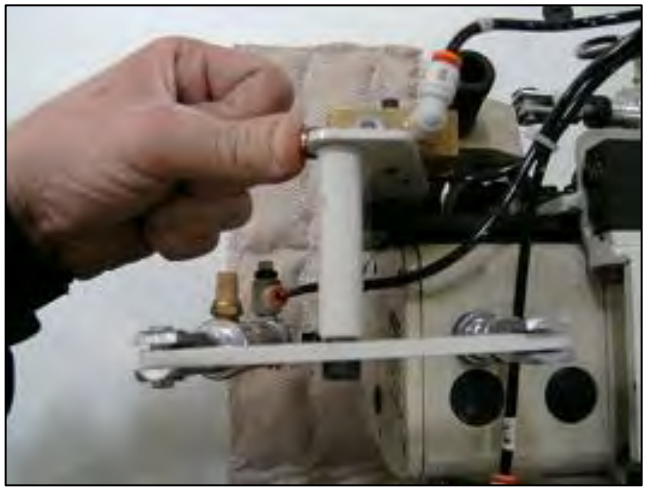

Count the number of stitches per inch.

Sew another line on the same scrap piece of material.

Count the stitches per inch with the puller. The stitches per inch without the puller should be ½to 1 full stitch more than with the puller. Example stitches per inch without the puller is 7 then the stitches per
inch with the puller should be 6 to 6-1/2.

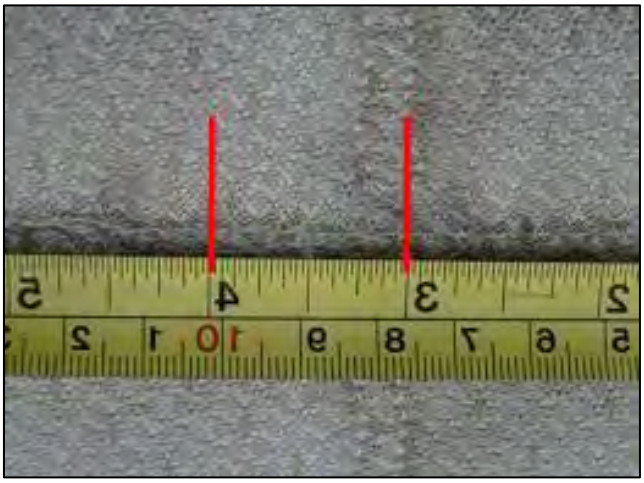

4.- Puller

Puller Height

The height of the puller wheel (1) is set so that it about .003 about the wear plate on the sewing head.

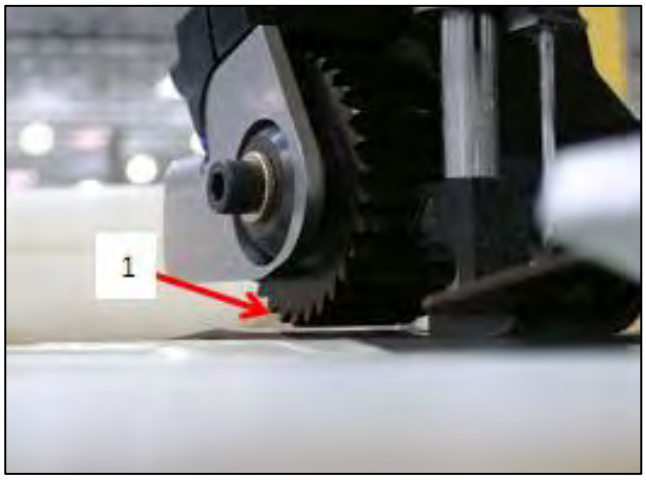

A business card or other heavy paper should be able to slide between the puller wheel and the wear plate.

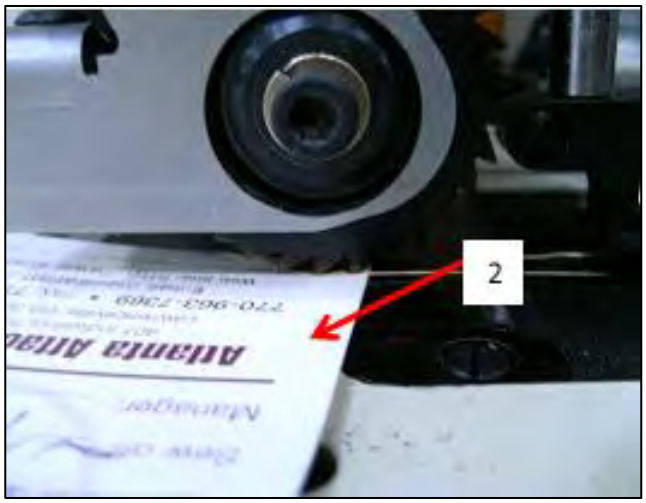

To adjust the height loosen the lock nut (3) on the puller shaft clamp block and turn the screw (4) until the correct height is achieved. Tighten nut (3) after making the adjustments.

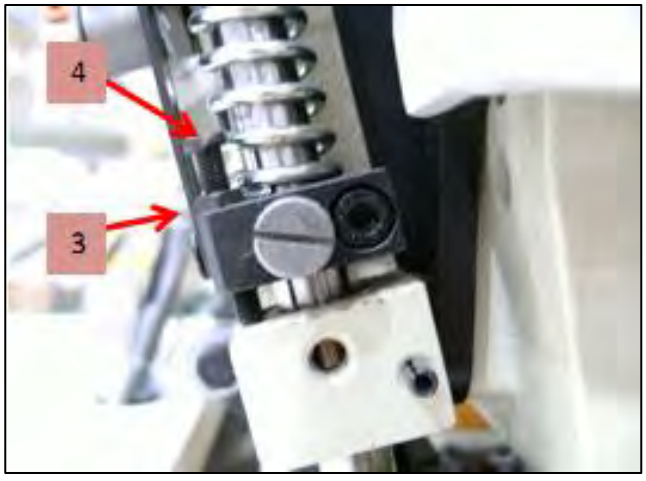

Puller Spring Pressure

Spring pressure is set by turning the adjusting screw (1) at the top of the puller assembly. The factory default is to have about 1.5 inches of the screw above the casting. Adjust according to material thickness and type.

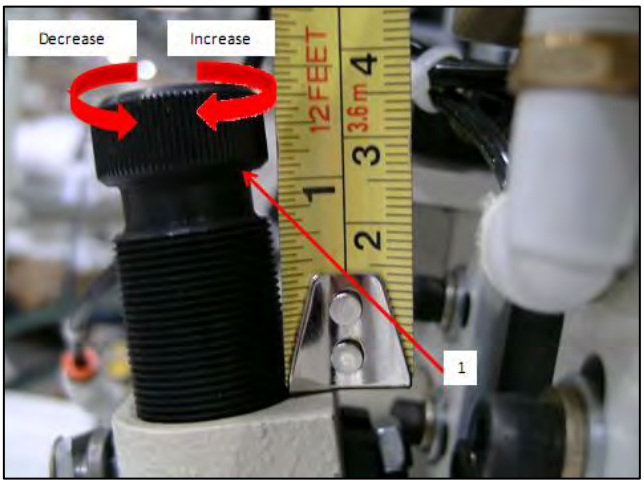

Puller Movement

The puller movement is set by loosening the lock nut (1) on the puller drive "dog bone" and moving it up or down in the slot (2) on the puller drive arm (3). Moving it up in the slot will decrease the feed amount and moving it down in the slot will increase the feed amount.

Set the puller so that it pulls out ½ to 1 full stitch more than when sewing without the puller. Example: Sewing without puller = 8 stitches per inch, sewing with the puller = 8 stitches per inch. Move the "dog bone" down in the slot to increase the feed amount until sewing with the puller = 7 to 7-1/2 stitches per inch.

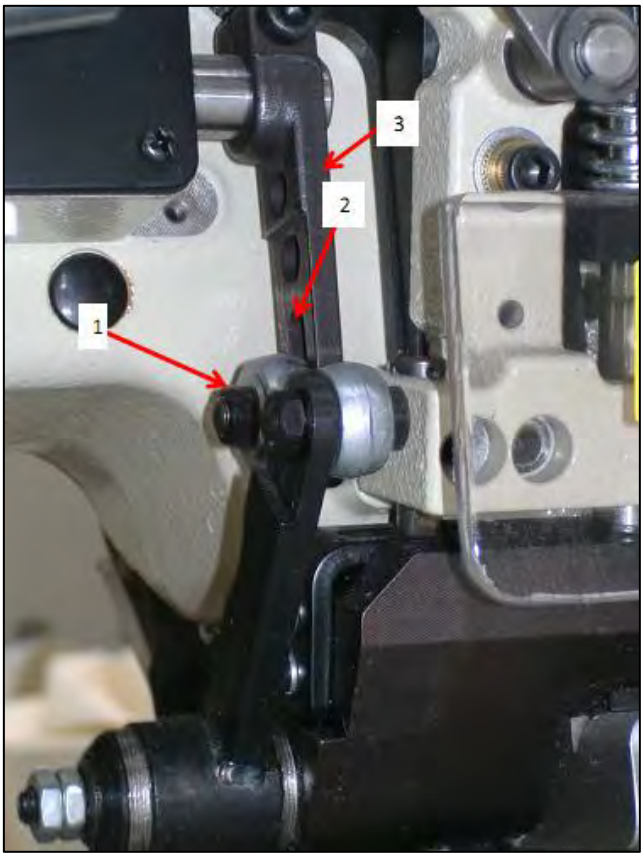

3.3 Pneumatically

3.3.1.- Air Regulators

1.- 1335MG (Yamato 2002)

The regulator assembly is located under the table. The right regulator is for the main air pressure, this is normally set to 70 to 80 psi. The middle regulator is for the panel tension finger, this is normally set to 15 psi but will vary according to the type of panel being sewn. The left regulator is for the presser foot cylinder, this is normally set to 15 to 20 psi.

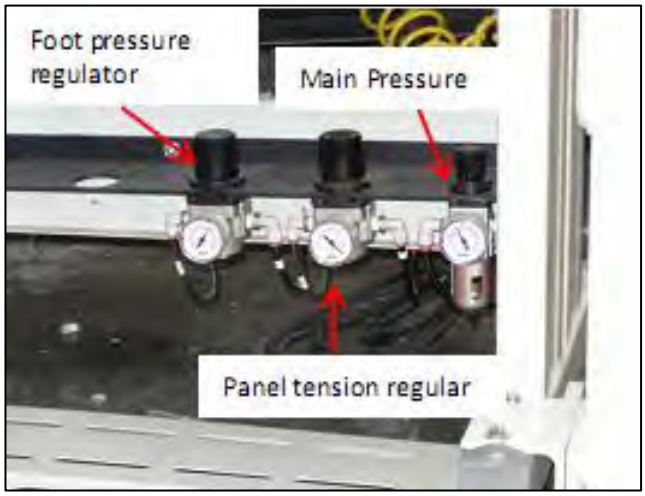

2.- 1335MH (Singer 300UX6)

Rufflers using the Singer 300UX sewing head have 4 regulators located under the table. The far right hand one is for the main air pressure and should be set to 70 to 80 psi. The second from the right is the panel tension pressure regulator and should be set to 15 psi, this will change depending on the type of non-skid being used. The second from the left is the puller pressure regulator, it should be set to 30 psi, this may change depending on the type of border material being sewn. The left hand regulator is for the ruffler blade down pressure, it is set from 10 to 30 psi, depending on the type and thickness of border material being sewn.

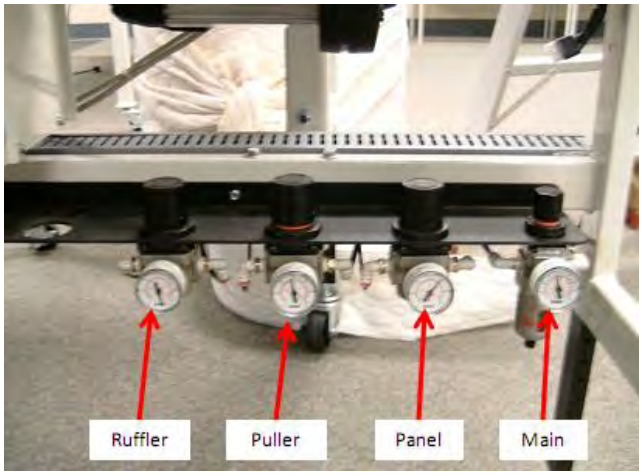

3.4 Electrical

It is important that the machine operator read this manual and is familiar with all the functions and safety concerns of the unit before operating.

3.4.1.- Main Power Switch

The main power On/Off switch is located under the table and to the right. It is used to turn the power on to the whole machine. This machine requires 220V Single Phase, 5 Amp service. If you have problems with the power not coming on when the On button is pressed you may check this switch by doing the following.

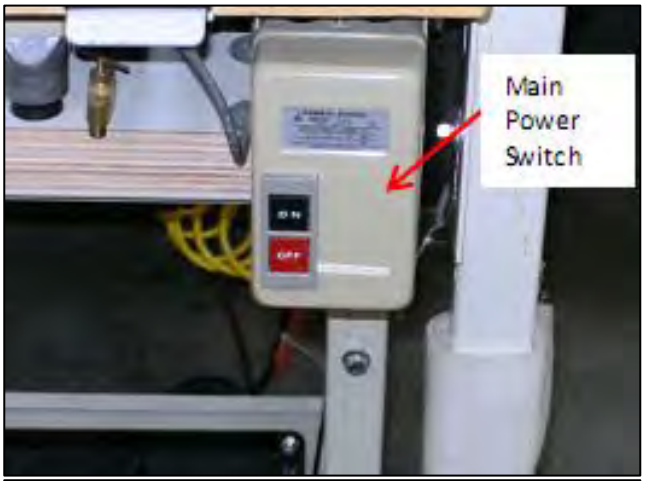

Make sure that the machine is unplugged before proceeding and that all lock out/tag out procedures have been correctly followed. Loosen the cover screw found at the bottom of the switch. You do not have to remove the screw. Remove the front cover.

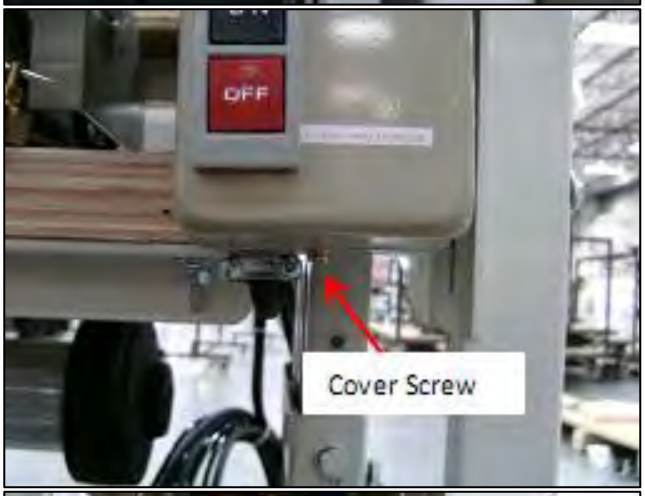

Check that the 5.5 reading on the Amp Dial is in line with the pointer. Press the reset button, if it "pops" back in then the contact had gotten overloaded at some point. Replace the cover, plug the machine in, and try turning the machine back on. If the 3 y contact still trips the overload, then there is a problem either with the wiring or the contactor. Use the wiring diagram for your machine in the parts manual to check the voltages. Try replacing the contactor.

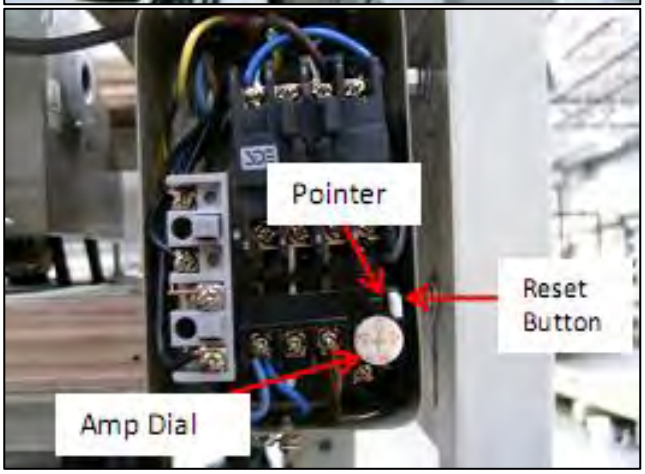

3.4.2 Stepping Motor Control Box

The stepping motor box is located under the table. The Ruffler box has three thumbwheels on the front which are set to synchronize the Ruffler to the sewing head. The number is proportional to the stitch length and is not affected by sewing speed. The 10-turn potentiometer is used to set the speed of the Ruffler during the feed in to pleat and feed out to make the next ruffle. It is set based on the thickness and type of material being sewn, if the ruffler blade stalls while feeding in or out you will need to lower the setting on this control. To adjust unlock the dial and turn counter clockwise to reduce the speed turn clockwise to increase.

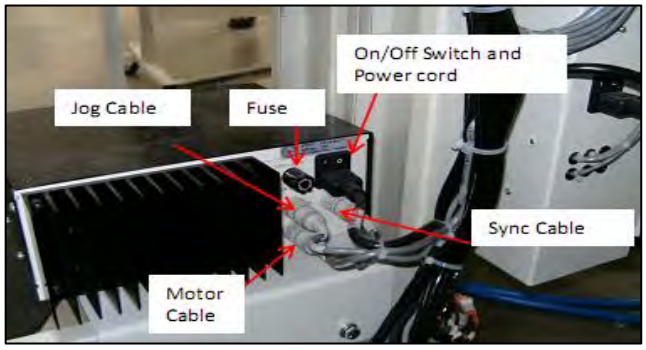

The back of the box has an on/off switch, fuse, and cables. Leave the on/off switch on all the time. When working on the box always disconnect the power cord before servicing.

3.4.3.- AP-28-800Y1 Stepper Control Box

The Ruffler box is located under the table and has three Thumbwheels **"A"** on the front which are set to synchronize the Ruffler to the sewing head. The number is proportional to the stitch LENGTH and is not affected by sewing speed. **Original factory setting 108**

The 10-turn potentiometer **"B"** is used to set the speed of the Ruffler during the feed in to pleat and feed out to make the next ruffle. It is **Pre-set to the maximum 60 from the Factory** and is locked in place by a small locking lever. Unlock to adjust.

2.- Mini Switch (SW1)

- **Switch # 1:** Control the rotations of the motor CW: Clock wise rotation. CCW: Counter close wise rotation For 1335 Ruffler 2 AMPS motors set to position Open (CW)
- **Switch 2:** No function
- **Switch 3:** No function
- **Switch 4:** For 1 amps motors**.** For 1335 Ruffler 2 AMPS motors set to position Open
- **Switch 5:** For 2 Amps Motors. For 1335 Ruffler 2 AMPS motors set to position Close
- **Switch 6:** For 2.5 Amps Motors. For 1335 Ruffler 2 AMPS motors set to position Open
- **Switch 7:** For 3 Amps Motors. For 1335 Ruffler 2 AMPS motors set to position Open
- **Switch 8:** For 3.5 Amps Motors. For 1335 Ruffler 2 AMPS motors set to position Open

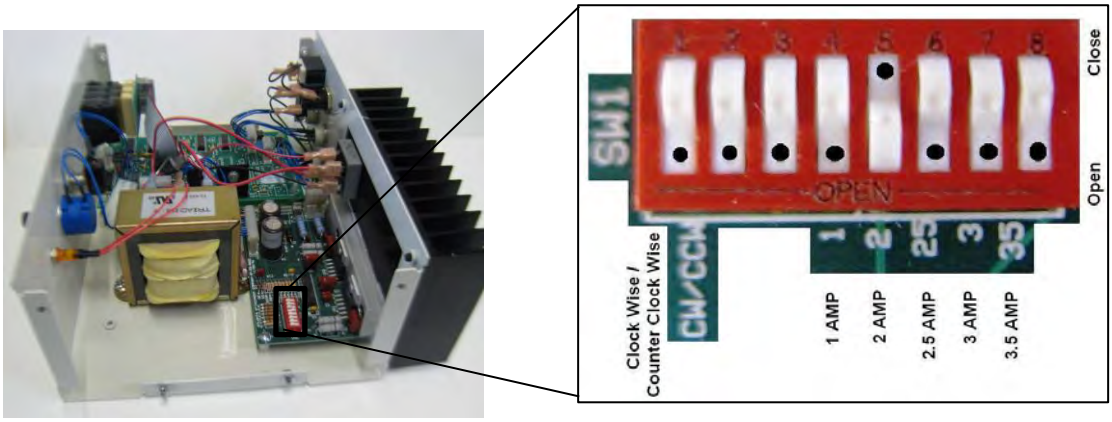

3.4.4.- Ruffler Control Box

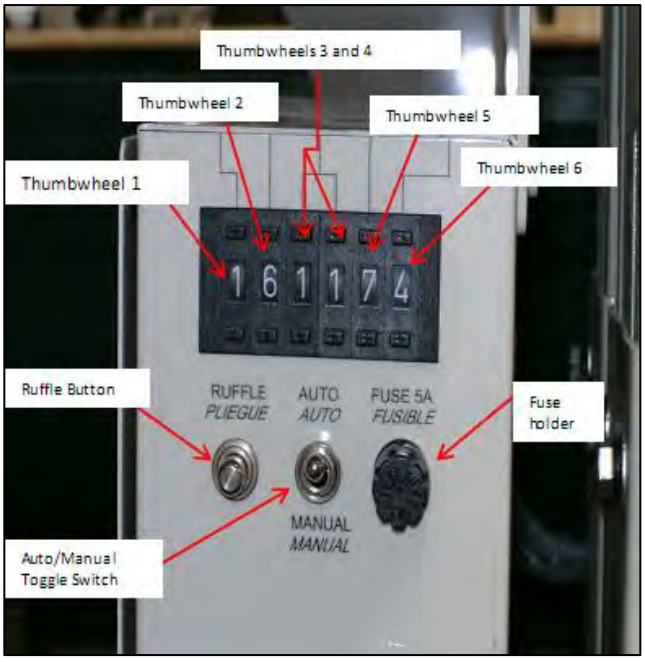

Thumbwheel 1 on the left sets the stitch count for the slow start feature after the last ruffle. This reduces the sewing speed for a few stitches to help the material to feed to the puller before the machine goes to high speed. The stitch count equals twice the number shown on the thumbwheel. This feature can be turned off by setting thumbwheel 1 to "0".

Thumbwheel 2 controls the sewing speed of the sewing head during ruffling. Each increment is approximately 100 rpm. The normal setting is "6".

Thumbwheels 3 and 4 together make up the Stop count for the corners. This is the stitch count (00-99 stitches) from when the front eye uncovers until the sewing stops in the corner to start the ruffling cycle. This should be adjusted to stop the panel so that when the corner turn is finished the right edge of the panel is flush against the edge guide, decrease the stitch count to stop the panel sooner. If, after turning the corner, the right edge of the panel is to the right of the edge guide, increase the stitch count to stop the panel closer to the foot.

Thumbwheel 5 has two functions. When it is set to 1-6, it sets the number of ruffles to be sewn in the corner. The panel must be turned while ruffling to form a round corner. When this thumbwheel is set to 7, 8, or 9 the ruffler will sew in "square corner" mode. In this mode, with the thumbwheel set to 7 the ruffle will sew to the corner, and make one ruffle while still sewing straight. The ruffler will then stop, the presser foot and puller will raise. The operator must keep the treadle pressed as the panel is turned 90 deg without sewing. When the treadle is released and pressed again the ruffler will make one ruffle straight ahead and the start sewing at regular speed. This creates a "square" or "straight" corner instead of the rounded corner. The stopping stitches must be adjusted for this mode to form a correct corner. If the thumbwheel is to 8, two ruffles will be made on each side for a total of four ruffles per corner. If the thumbwheel is set to 9, three ruffles will be made on each side for a total of six ruffles per corner.

Thumbwheel 6 sets the number of stitches sewn in each ruffles and is adjusted according to the ruffle size. There should be enough stitches to sew to the folded edge of each ruffle.

The **Auto/Manual Switch** turns on the automatic ruffling cycles for the corners. When this switch is set to Manual, the ruffling is disabled and the machine will only sew, trim, and foot lift.

The Manual Ruffle push button turns on the ruffle cycle and also functions as the Reset button for the automatic cycle. Pushing this button once will turn on the ruffle cycle. Pushing it a second time will reset the automatic program and cause the ruffle hardware to reset and go to its "home" position. Use this button to reset the ruffler after adjusting the ruffle size.

The Fuse Holder fuses the entire machine. Replace the fuse with a 5A Slow Blow 250V as necessary.

The back of the control box has the power cord plug and on/off switch. Be sure the on/off switch is always on. Always disconnect the main power cord before servicing the control box.

The door on the left side of the ruffler control box gives access to the electronic components. The on/off switch (1), the unwinder relay (2), the computer board (3), the thumbwheels (4), the valve assembly (5), the WAGO blocks (6). Do not service this part of the machine while power is still connected. Unplug the power cable from the back of the control box, follow all lock out/tag out procedures.

3.4.5.- Eyes

1.- Panel End Sew Eye

The panel end sew eye is located under the table top, part of the flip down access. The panel end eye, "looks" for the end of the panel. When the end of the panel goes by it sends a signal to the ruffler control box to start counting stitches for the stop count, thumbwheels 3 and 4.

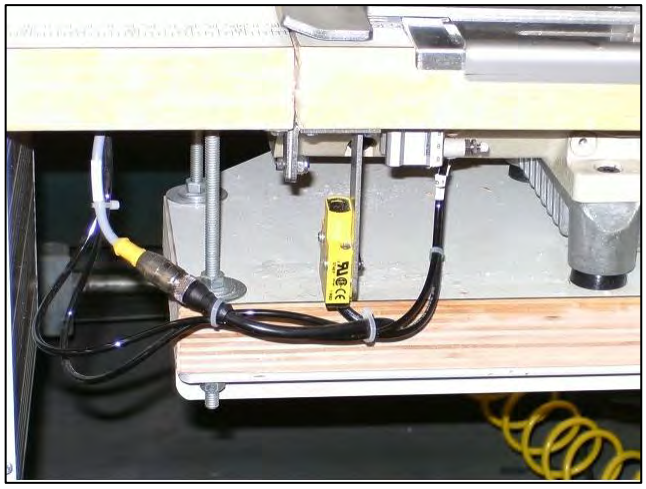

2.- Hand wheel Eye

The Hand wheel eye (1) is mounted to the top of the table, behind and to the right of the sewing head. The Hand wheel eye (1) reads a piece of reflective tape located on the pulley disks (2). The Hand wheel eye is responsible for reporting to the Efka motor that the sewing head is sewing at the set RPM, stitch counting for all counters, and for needle position when stopping.

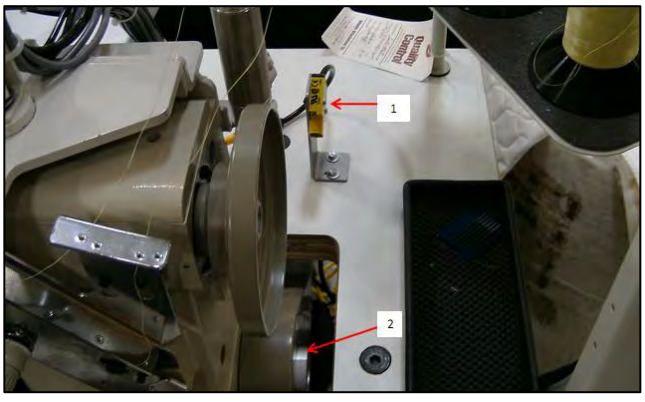

3.- Border Loop Eye

The border loop eye is located on the border guide rod assembly. The border loop eye,
when covered (yellow light is on) activates the border unwinder feed rollers.

4.- Adjustments

Hand wheel and Panel Eye

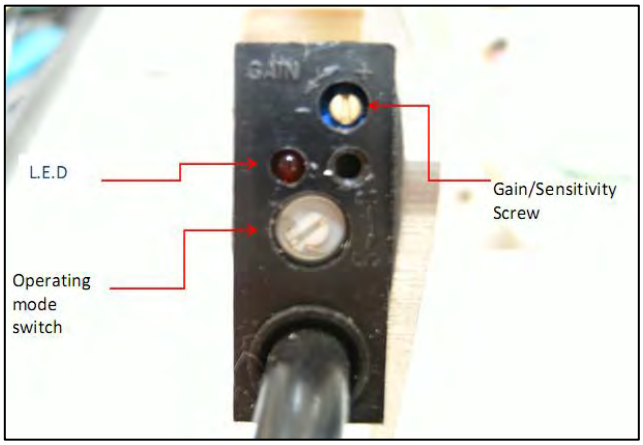

To set the eye, first remove the cover (not shown), make sure that the operating mode switch is set to L.O. or all the way clockwise, with the eye "seeing" the reflective tape, turn the Gain/Sensitivity Screw to the "+" or clockwise until the L.E.D starts blinking, the L.E.D should blink about 2 times per second when set correctly.

Border Loop Eye

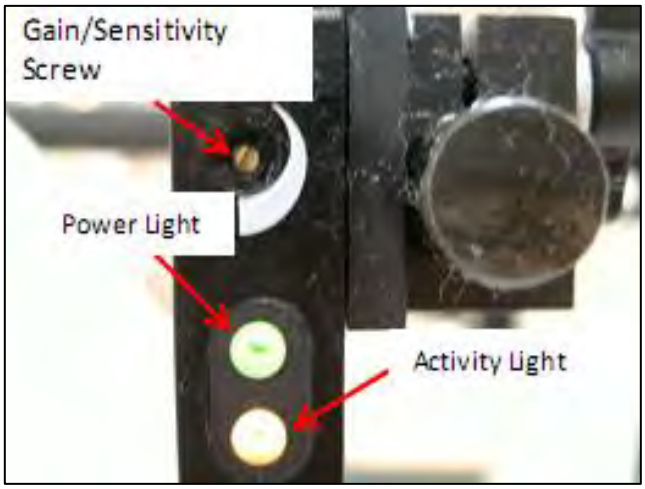

The border loop eye activates the unwinder motor when the border material is lifted up towards it and the yellow activity light comes on. To adjust the eye you need to turn the Gain/Sensitivity screw, turning it clockwise will increase the sensitivity of the eye creating a larger loop, turning it counter clockwise will decrease the sensitivity of the eye creating a smaller loop.

Adjust the eye so that a loop of border material is maintained while sewing the border to the panel.

3.5.- Efka Motor

3.5.1.- Connections

The back of the Efka Motor has all of the cables.

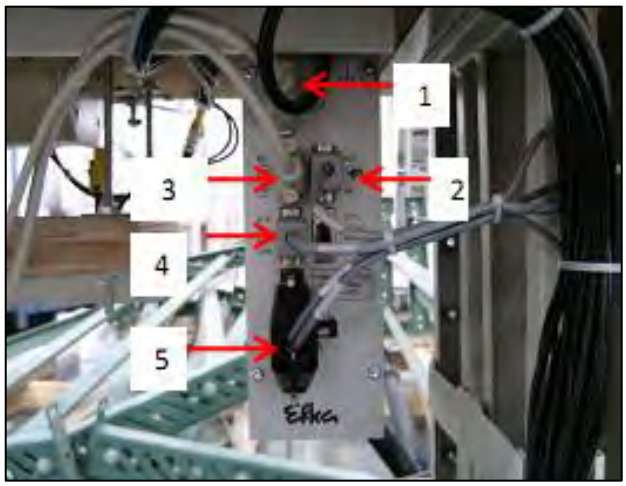

1.- Power Cable for the Efka Motor.(Goes to the Efka Motor)
2.-Foot Pedal Cable
3.- Commutation Transmitter (goes to the Efka Motor)
4.-Hand wheel Eye
5.-Socket for solenoid inputs and outputs, solenoid valves, displays, keys and switches

3.5.2.- Parameters

Parameter Programming Sheet 1335

PARAMETER	RANGE	MITSUBISHI LOCHSTITCH	JUKI/CONSEW CHAINSTITCH	YAM 1804 CHAINSTITCH	YAM 2002 CHAINSTITCH	SING 300UX5 WALKING FOOT	1335M PARAMETER DESCRIPTION
Do this first	*****	****	****				Perform a master reset before programming, see below
290		0	5	5	5	5	Mode (Lockstitch) of operation. MUST SET THIS PARAMETER FIRST!
026		0	0	0	0	0	Treadle config for EB301
111	200-9900 rpm	4000	3000	3500	3200	2500	Maximum speed when "129" is 0, 1, or 2.
153	0-50	--	--	--	--	35	Braking power at machine stand still
161	0-1	1	1	0	1	1*	Motor rotation, 1=CCW
180	0-360 (175)	60	--	--	--	--	Degrees reverse run goes to get to needle up
181	0-999 (10)	01	--	--	--	--	Delay till reverse run starts after trim
182	0-1 (0)	1	0	0	0	0	Enable reverse run after trim to get to "true" needle up
202	0-500	50	50	500	500	500	Sew delay after foot lift off
219	1-55	35	--	--	35	35	Breaking power at stop
250	0-359	150	--	--	--	--	Thread trimmer activation angle
270	0-5	1	1	1	1	1	External handwheel sensor configuration. (Position 2)
271	0-255	180	180	165	165	165	Ref angle for Position 1 (Trim) from Position 2
272	0200-2550	1000	1000	1000	1000	1000	Drive ratio between motor pulley and handwheel pulley. If handwheel pulley is smaller than motor pulley, increase this value to slow down sewing head until measured speed matches speed set with parameter 111. (For Yamato and Pegasus, setting should be 100; for Rimoldi, setting should be 124)
436		0	0	0	0	0	Use code "5913". This disables an input that was causing box to reset itself.
401**	0-1	0-1	0-1	0-1	0-1	0-1	CHANGE FROM 0 TO 1 TO SAVE PARAMETERS

Front Panel LED's

LED 1 Off
LED 2 Off
LED 3 Off
LED 4 Off
LED 5 Off
LED 6 Off
LED 7 On, Stop at Needle Down
LED 8 Off, Stop at Needle Up.

* ON 1335MHP SET TO "0" (CW)

Programming Instructions:

1. Power on holding down the "P" button till "COD" is displayed.
2. Press ">>" once and enter the number "5912"
3. Press "E" once and "2.0.0." is displayed this is a parameter
4. Proceed to the parameter to be changed and press "E".
5. The value now shows in the screen, adjust to desired value.
6. Press "E" to enter value and continue with parameter setting.
7. Repeat for other parameters, press "P" once when complete.
8. **Run sewing head to save parameters before powering down**

To Perform Master Reset of Parameters:

1. Power on holding down the "P" button till "COD" is displayed.
2. Press ">>" once and enter the number "5913"
3. Press "E" and "093" is displayed.
4. Press "+" once, "094" is displayed.
5. Wait for display to reset.
6. Press "P" to exit programming mode with all default values.

****To Save Parameters**

1. Before exiting programming mode:
2. Go to Par 401, press enter
3. Change setting from 0 to 1, press enter.
4. Wait for display to reset.
5. Press "P" to exit programming mode with all values saved.

3.5.3.- Programming

1) Press and hold the “P” button while turning on the Main Power Switch.

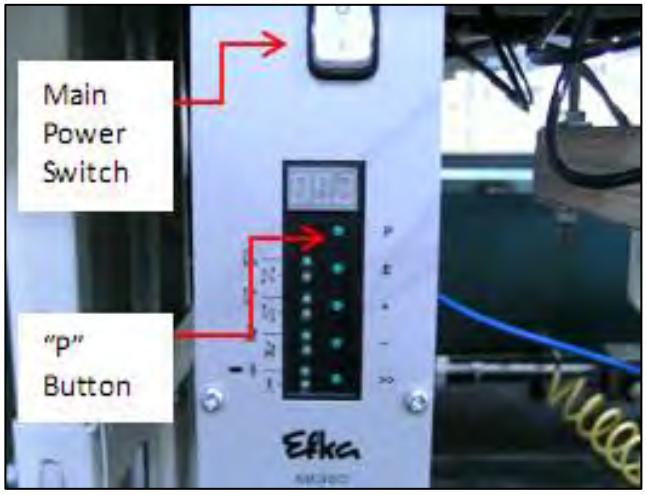

2) Once “cod” (short for code) appears in the display release the “P” button and press the “>>” button. The code to enter in is “311”

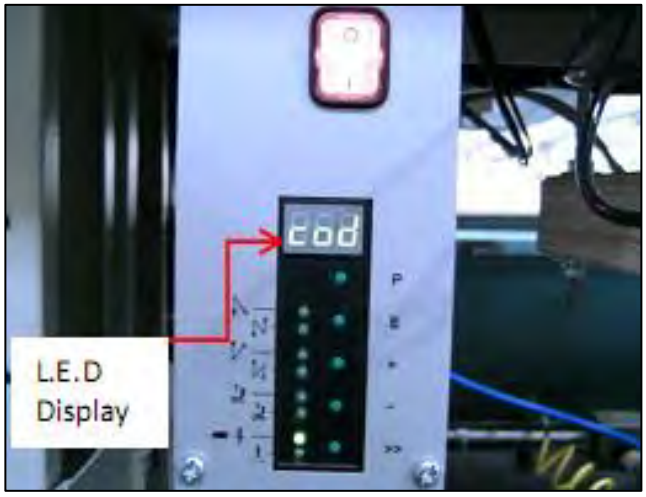

3) 000 will appear on the display with the left 0 blinking. Press the “+” three times to get a “3” in the display, if you go past “3” then either continue pressing the “+” button until it cycles back or press the “-” button to go back. Then press the “>>” button. Page 1

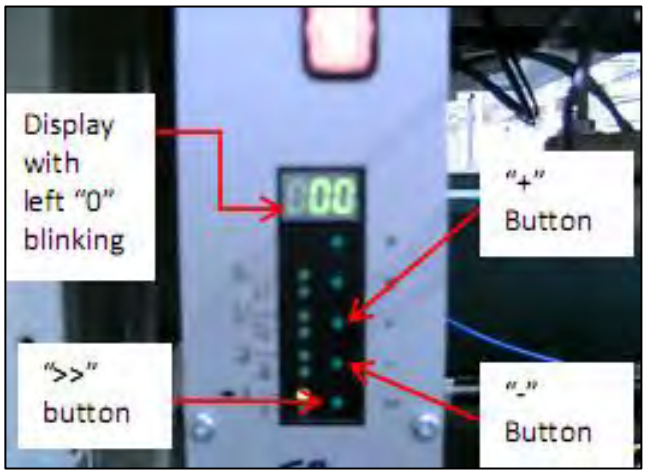

4) Display should look like picture to the left with the middle “0” blinking, if not press the “>>” button until the middle “0”is blinking. Press the “+” button once to get a “1” as the middle number. Then press the “>>” button.

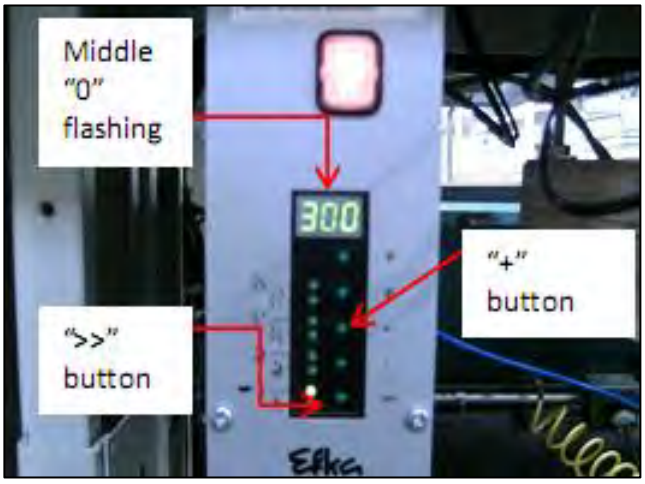

5) Display should look like picture to the left with the right “0” blinking, if not press the “>>” button until the right “0” is blinking. Press the “+” button once to get a “1” as the right number.

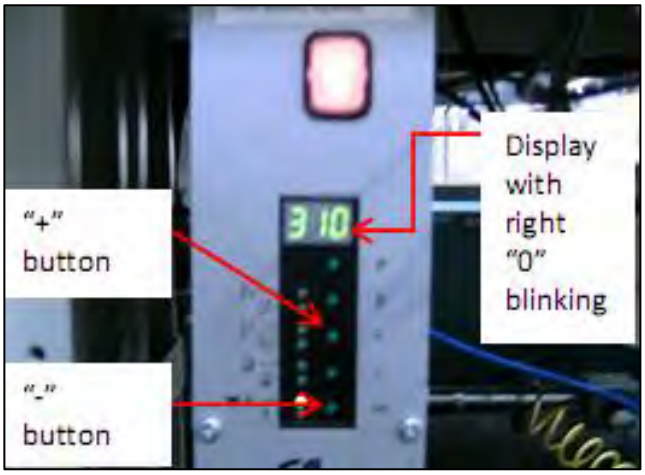

6) Display should look like picture to the left with the right “1” flashing. (It does not matter which number in the display is blinking as long as it reads “311”) Press the “E” button.

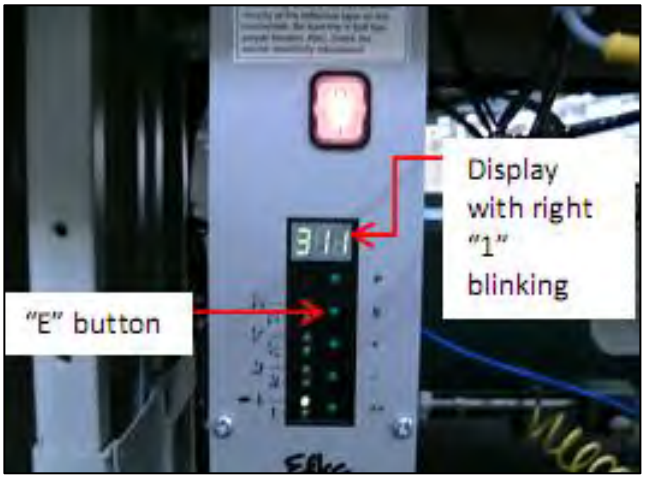

7) The display will change to “2.0.0.” this is a parameter number “200”. Any number with the “.” between the digits will be a parameter. To move to the correct parameter you will press either the “+” or “-” buttons. Press and hold the “+” button, the parameter numbers will start scrolling faster the longer the button is held down, until “2.9.0.” is displayed. This is the first parameter to be programmed when starting new, only using as an example. (You may need to access a different parameter number, use the same method as above)

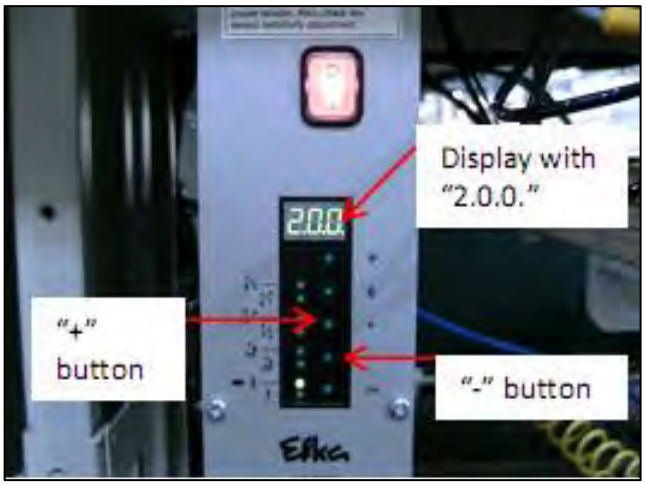

8) With “2.9.0.”(or parameter number you chose) in the display, which is parameter “290”, press the “E” button once.

9) The display will change from “2.9.0.” to “05” (your display may not be the same, depends on the type of sewing head being used, refer to your machines programming sheet in manual) this is the setting of parameter “2.9.0.” all displayed numbers without the “.”are values of parameters. To change this number use the “+” or “-” button. Then press the “E” button once.

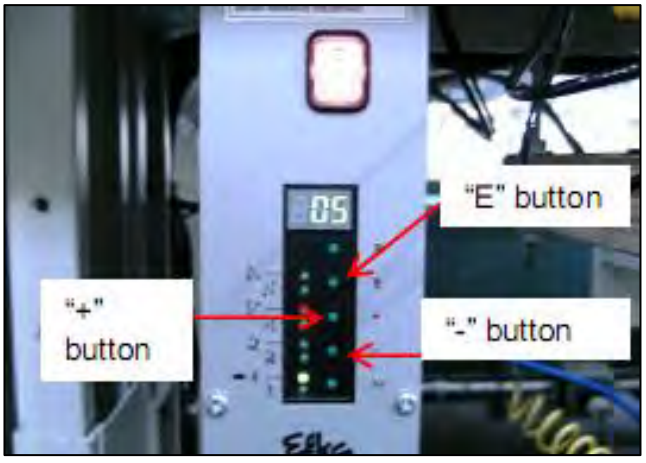

10) The display will show “2.9.1.”, this is the next parameter after “290”. You will use the “+” or “-” buttons to advance to the next parameter on the list, then follow the process in step 9. Continue this until all parameters have been set according to the programming sheet. After the last parameter has been set, if the number displayed DOES NOT have the “.” between them, press the “E” button then press the “P” button. If it DOES have the “.” between them then only press the “P” button.

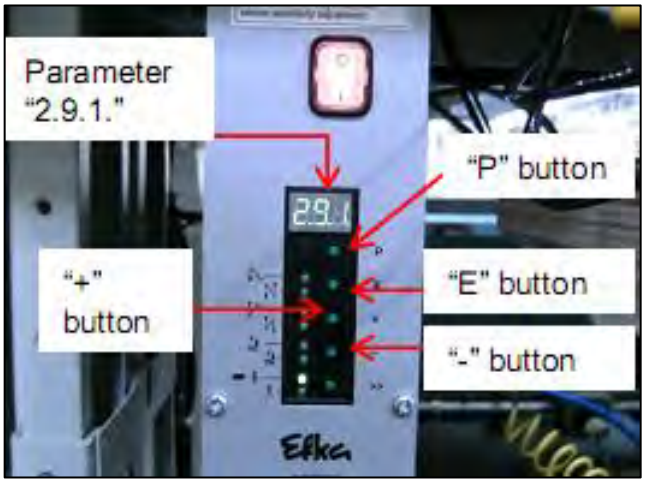

11) The display will now show the set maximum RPM. The display only shows three numbers the actual RPM in the example picture is 3200 RPM. You will need to sew at least one stitch to lock in the changes to the parameters and complete the process.

3.6.- Maintenance

3.6.1.- Daily

Open up all the covers on the sewing head and blow out the lint from the machine.

Wipe the electric eyes off with a soft nonabrasive cloth.

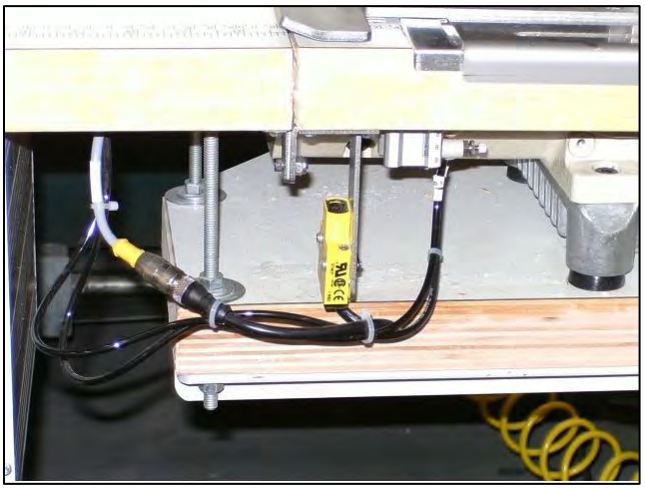

Check for and clean threads from around the puller housing and puller wheel.

3.6.2.- Weekly

Check and clean thread from around the puller wheel and housing. The thread can harm the clutch bearings inside the puller wheel if allowed to build up. If, especially using Kevlar thread, there is thread wrapped around the puller shaft it may necessary to disassemble the puller wheel to remove all of the threads.

Check the condition of the reflective tape for the panel eye. Clean with a dry soft cloth or replace as needed. If the tape is replaced it may be necessary to adjust the sensitivity of the eye, follow the instructions in the Hand wheel and Panel Eye Adjustment section.

Check the condition of the reflective tape for the Hand wheel eye. Clean with a dry soft cloth or replace as needed. If the tape is replaced it may be necessary to adjust the sensitivity of the eye, follow the instructions in the Hand wheel and Panel Eye Adjustment section.

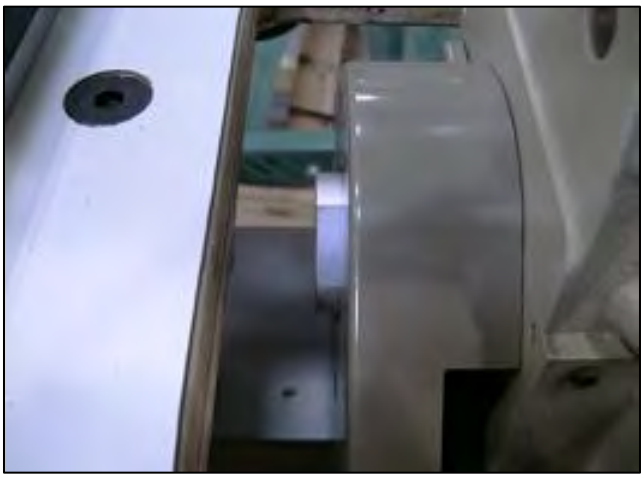

Check the oil level by looking into the sight glass. The oil level should be between the two red lines inside the sight glass.

To add oil swing out the ruffler assembly to access the rubber
plug over the oil hole. Remove the rubber plug and add oil until the correct oil level is reached. Replace rubber plug after filling.

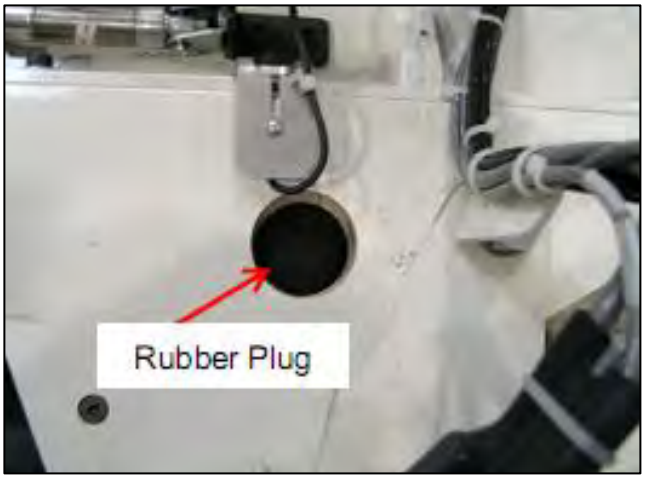

Blow out the dust on the screen of the air table blower motor.

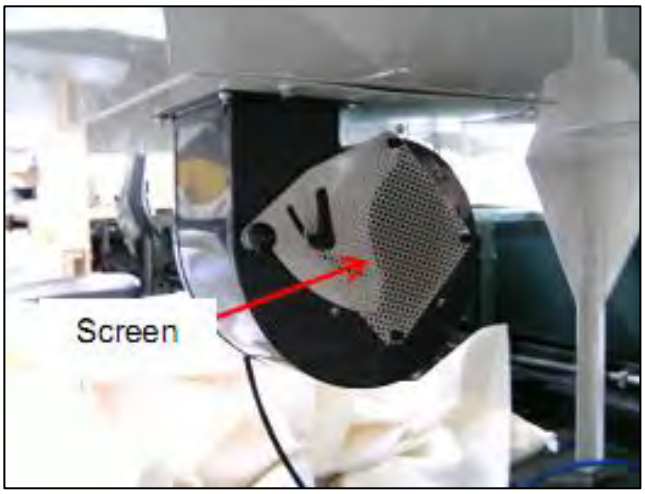

3.6.3.- 3 Month

Running two 8 hour shifts

3.6.4.- 6 Month

Running one 8 hour shift

Place a container under the drain located on the bottom right of the sewing head. Drain the oil by opening the valve and allowing the oil to completely drain into the container then closing the valve.

Replace the oil filter by removing the three screws holding the cover on the back of the sewing head. Insert a new filter and replace the cover and screws.

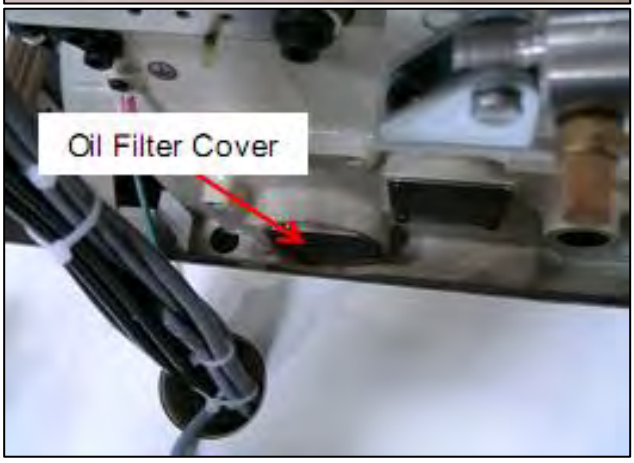

Fill the oil reservoir by swinging out the ruffler assembly and removing the rubber plug. Replace rubber plug after filling.

Fill the oil level until the oil is between the two red lines viewed through the sight glass.

3.7.- Troubleshooting

3.7.1.- Efka Controller Error

Problem	Solution
A1 Pedal not in neutral position, when turning the machine on	
A2 Machine run blockage	
A3 Reference position is not set	
A6 Light barrier monitoring	
A7 Bobbin thread monitor	
E1 The external pulse encoder is defective or not connected 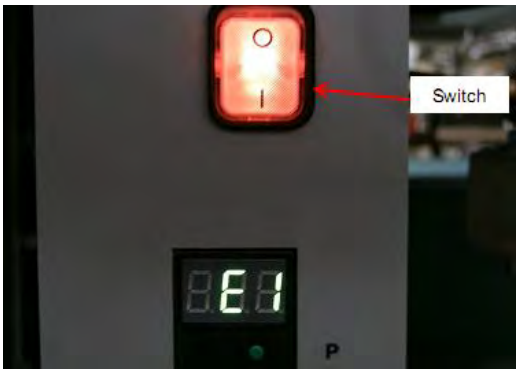	To clear the error turn the power off to the Efka controller using the switch on the front of the box and wait about 30 seconds then turn the power back on. The display should show the programmed speed. The cause of the E1 error is that the Hand wheel eye is not seeing the reflective tape do the following: See check list on the next page with details about this error 1) Check that nothing is blocking the eye. 2) Check the condition of the tape, replace if necessary. 3) Adjust the position of the eye. 4) Adjust the sensitivity of the eye. See page 4.11 5) Replace the eye. 6) Check the cables going to the eye.
E2	Line voltage too low, or time between power off and power on too short
E3	Machine blocked or does not reach the desired speed
E4	Control disturbed by deficient grounding or loose contact
E9	EEPROM defective
H1	Commutation transmitter cord or frequency converter disturbed
H2	Processor disturbed

3.7.2.- Flow Chart EFKA Error E1

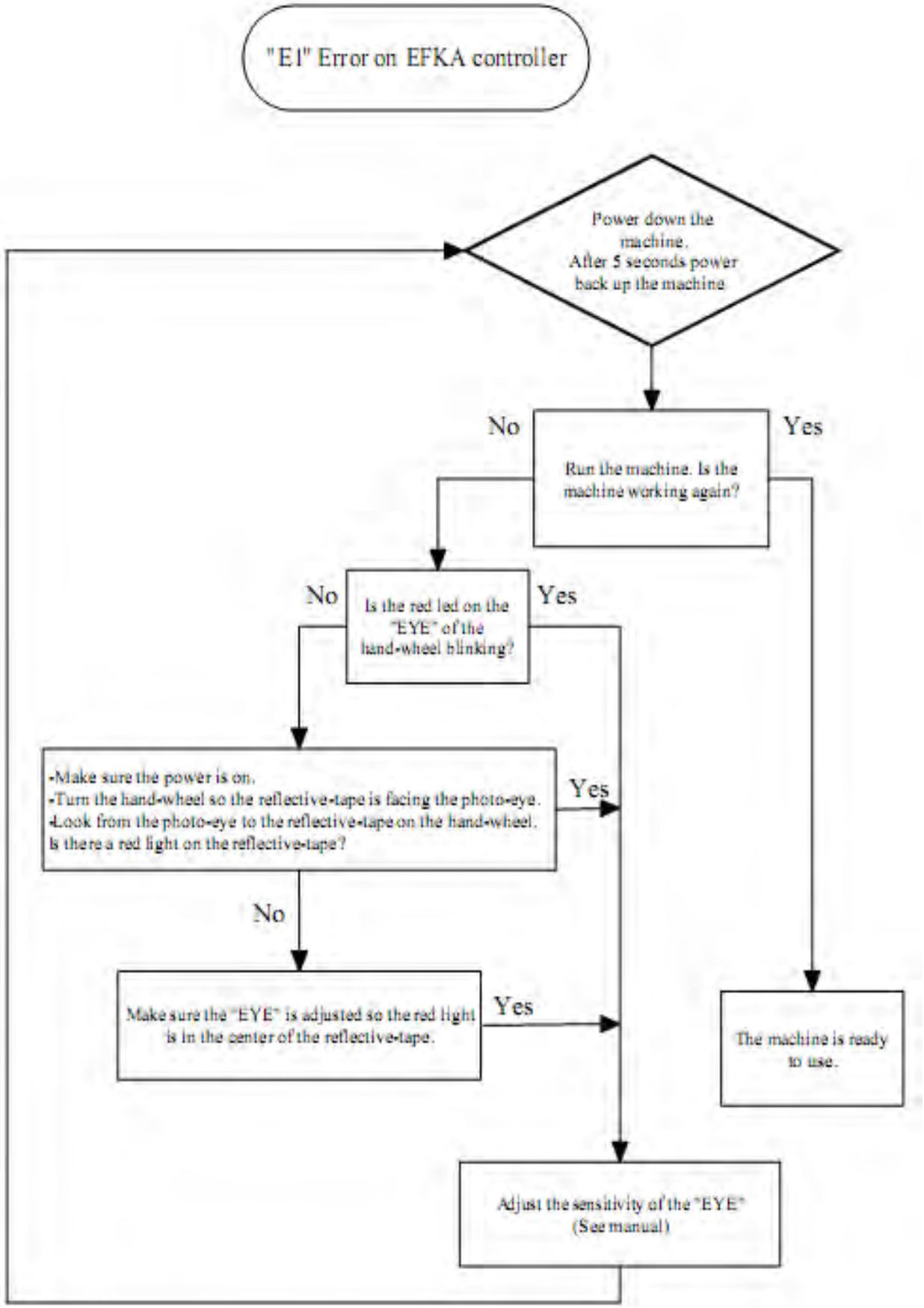

3.7.3.- Sewing Errors

Problem	Solution
Skips in the corners 	1) Check the thread tensions. 2) Check that the machine is threaded properly, see chapter 2.3 3) Check the ruffling blade adjustments, see chapter 3.1 4) Check the sewing adjustments, see chapter 3.2
Long stitch at the start of the ruffle or on the ruffle. This stitch will look like a skip but on the bottom side you will not see a needle hole or a loose stitch but still may cause a open spot in the seam. 	1)Adjust the ruffling blade so that it doesn't push the ruffle in past the needle, see chapter 3.1.4 2)Adjust the stitches per ruffle count higher, see chapter 3.2

3.7.4.- Sewing Errors – Yamato 2002 needle-feed head

Problem	Solution
If a long stitch is present at the start of a ruffle or on the next ruffle. This stitch will look like a skip but on the bottom side you will not see a needle hole or a loose stitch but still may cause an open spot in the seam. 	**Follow next 4 Steps** **1.- Check the location and stroke of the Ruffler Assembly.** If required, move the motor mount block all the way backwards to the rear of the adjusting slots, insuring that there is no spindle/worm-gear binding present after tightening up the socket cap screws. With power off move the assembly up and down by hand to check for binding. 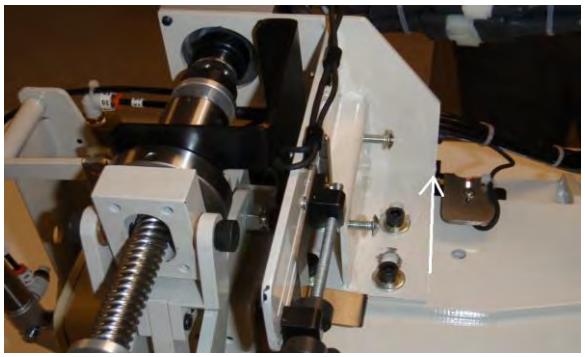 With power on : the ruffle assembly will move to the up or home position. If motor binds in home position, move home position sensor outward to prevent the worm-gear from hitting the end-stop disc. Test again by turning off power or cycle the ruffle assembly allowing it to return to the home position.

2. Review the location of the ruffle blade to the needle when the blade is in the downward position, just before the ruffle begins.

Instructions to check location of blade:

a) Switch the manual/automatic button to the manual position.
b) Push the reset button one-time and the ruffle blade will come down.
c) Step on the treadle control one-time and the ruffle blade will move inward and stop.
d) Review the location of points of the blade to needle shank
e) Push the reset button one-time and the ruffle blade will return upward to the home position.
(Normally the blade points should stop even with the needle shank. However, if you are using a dense material and the blade is lifting the foot too much, it may push the material backwards, creating a long stitch.)
To reduce the long stitch, adjust the distance "A" from even up to 3/8 "which is measured from the needle shank to the point of the ruffle blade. Note: This dimension is based on your material thickness, keeping in mind that you want to minimize the lifting of the presser foot and the pushing of material backwards when the ruffle blade comes down and moves forward.

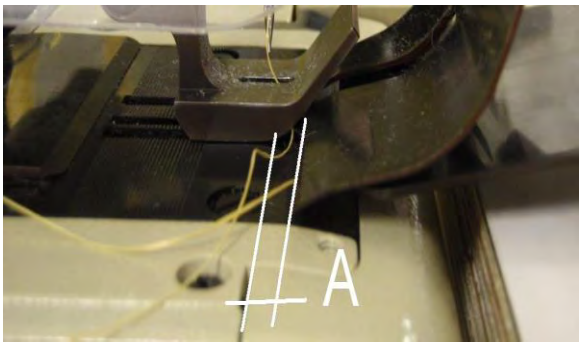

3. This adjustment is controlled by the down-stop sensor located inside the worm gear cover.
a) Remove the cover
b) Switch the manual/automatic button to the manual position.
c) Push the reset button one-time and the ruffle blade will come down.
d) Step on the treadle control one-time and the ruffle blade will move inward and stop.
e) Measure the distance and adjust blade position by moving position of the sensor.
f) Push the reset button and the ruffle blade will return upward to the home position.
g) Repeat steps (a-f) as needed to obtain the necessary distance "A"

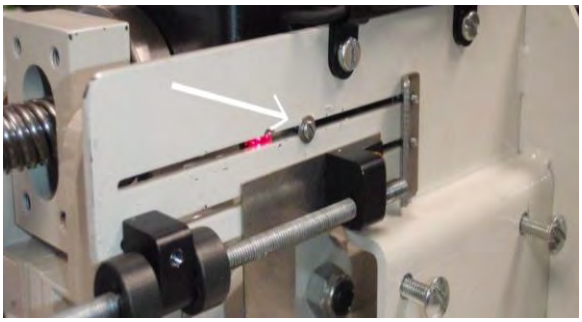

4. Any change to this adjustment may also require changes to thumbwheel # 6 (stitches pre-ruffle) and the depth of the ruffle.

Instruction to check stitches per-ruffle:
a) Switch the manual/automatic button to the manual position.
b) Push the reset button one-time and the ruffle blade will come down.
c) Step on the treadle control one-time and the ruffle blade will move inward and stop.
d) Step on the treadle control once again and the blade will move inward and sewing head will begin to sew the number of stitches set on the thumbwheel and stop
e) The needle should stop just before stepping off the crown/fold of the material. Adjust the numbers up or down as needed. (note: If you have move more than one ruffle programmed, each time you step on the treadle it will go through this cycle until it is complete and then it will return to the home position)
f) Push the reset button one-time and the ruffle

blade will return upward to the home position.
g) Switch the manual/automatic button to automatic position for normal operation.

Está
BajeInstructions for adjusting ruffle depth:

This adjustment is located on the top of ruffler assembly and is controlled by turning the knob inward or outward, noting where the indicator arrow is pointing. ***(The higher the number the greater the depth of the ruffle.)***

The object of this setting is to ruffle/fold-up or use-up material within the corner as needed for the width of sewing margin or distance from the right edge of material to the needle.
This is same concept as the amount of material you would need to remove when physically mitering a corner for a bed. Such as; if you cut-out or remove 3 inches of material, you need to ruffle in 3 inches of material. Example: a setting of 3 ruffles, with a depth Ponga el .of ½ inch or a setting of 6 ruffles with a depth of ¼ inch… etc.

3.7.5.- Flow Chart Stops at the corner

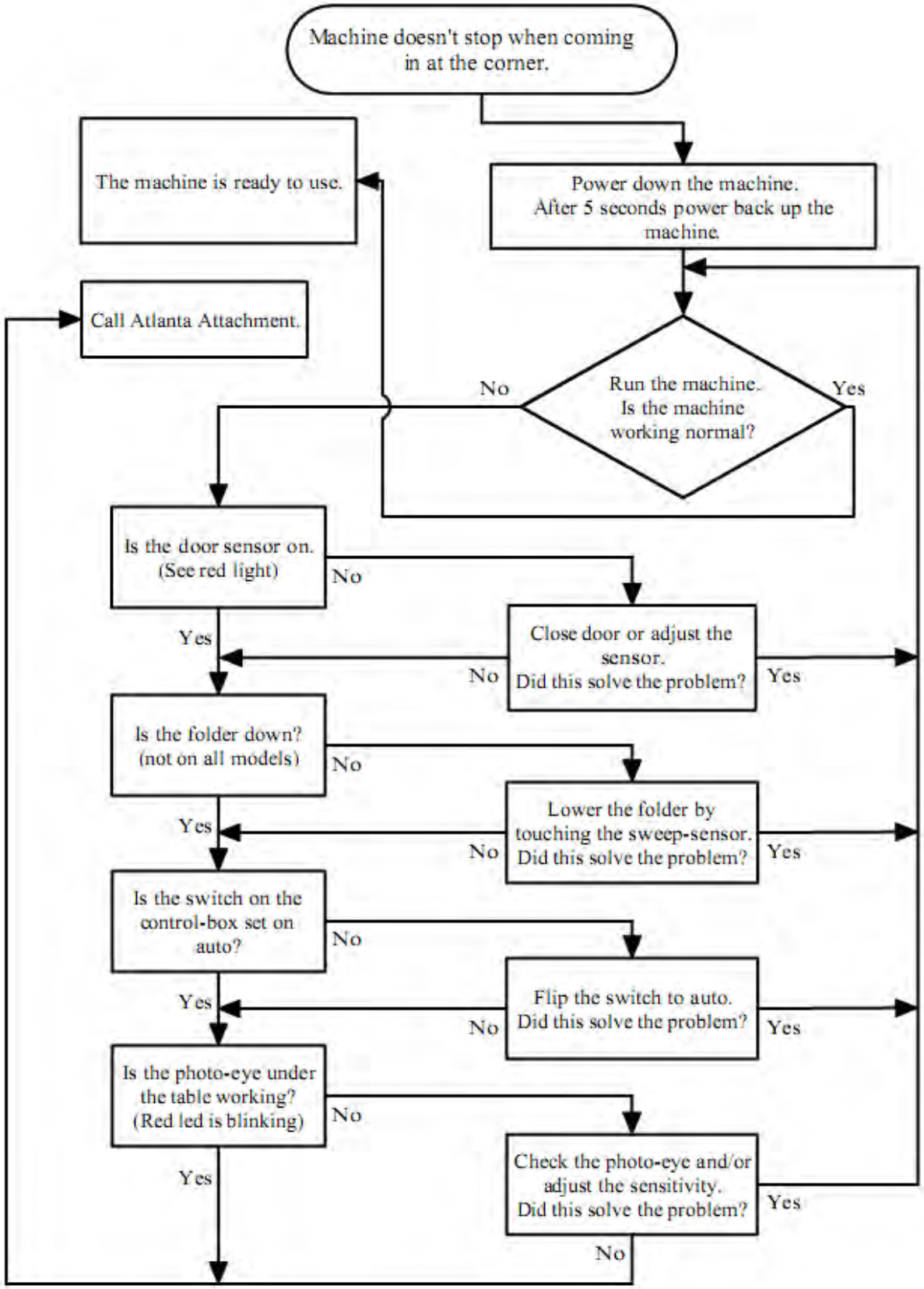

Assembly Drawings & Parts Lists

The materials contained herein are confidential and proprietary information of Atlanta Attachment Company. In addition to any confidentiality and non-disclosure obligations that currently exist between you and Atlanta Attachment Company, your use of these materials serves as an acknowledgment of the confidential and proprietary nature of these materials and your duty not to make any unauthorized use or disclosure of these materials.

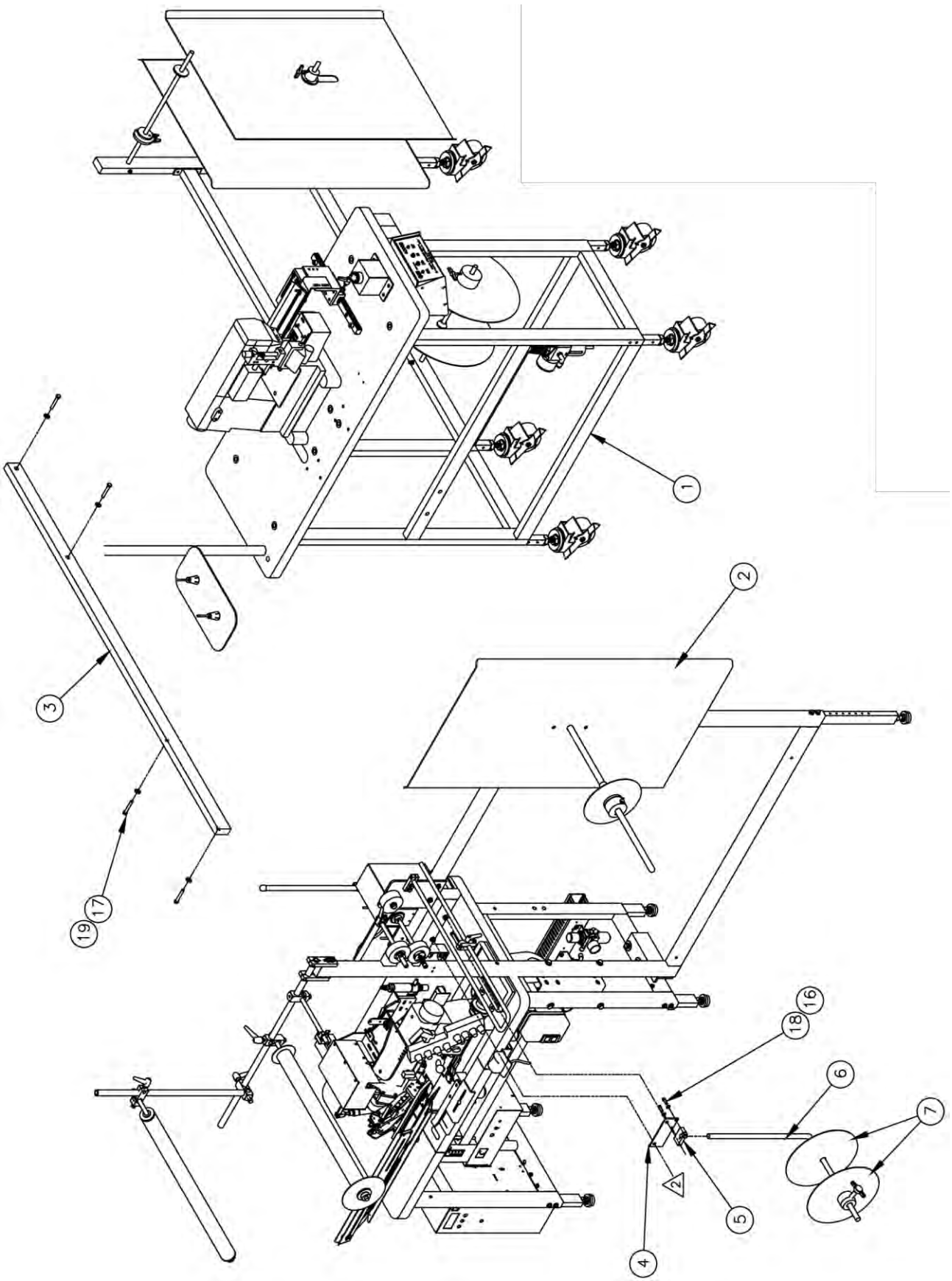
1
2
3
17
19
16
18
6
7
2
5
4

11335MGC-34SD Manual Pillowtop Ruffler, HD

AAC Drawing Number 192100B Rev1

NO.	QTY	PART #	DESCRIPTION
1	1	1334S-02	Auto Flang Workstation
2	1	11335MGC-SD	Cont. Foundation Ruffler
3	1	1335-002	Joining Tube
4	1	1334035	Adaptor
5	1	3206007	Rod Clamp
6	1	A-2212A	Bent Rod
7	2	785-A95-06	Disc Assy.
8	AR	1335M-03	Instructional
9	AR	1335MFC-34WD2	Wiring Diagram
10	1	4060-0652	PC Board
11	1	A-2126L5/16	Folder
12	AR	EP-1335M34	Eprom
13	4	FF67F4079	PC Board Spacer
14	3'	FF8524-10	Blk Wire 22 Ga.
15	2'	FF8524-2	Red Wire 22Ga.
16	2	WWL1/4	Lock Washer
17	4	SSHC10112	Hex Cap Screw
18	2	SSHC01040	Socket Cap Screw
19	4	WWF5/16	Flat Washer

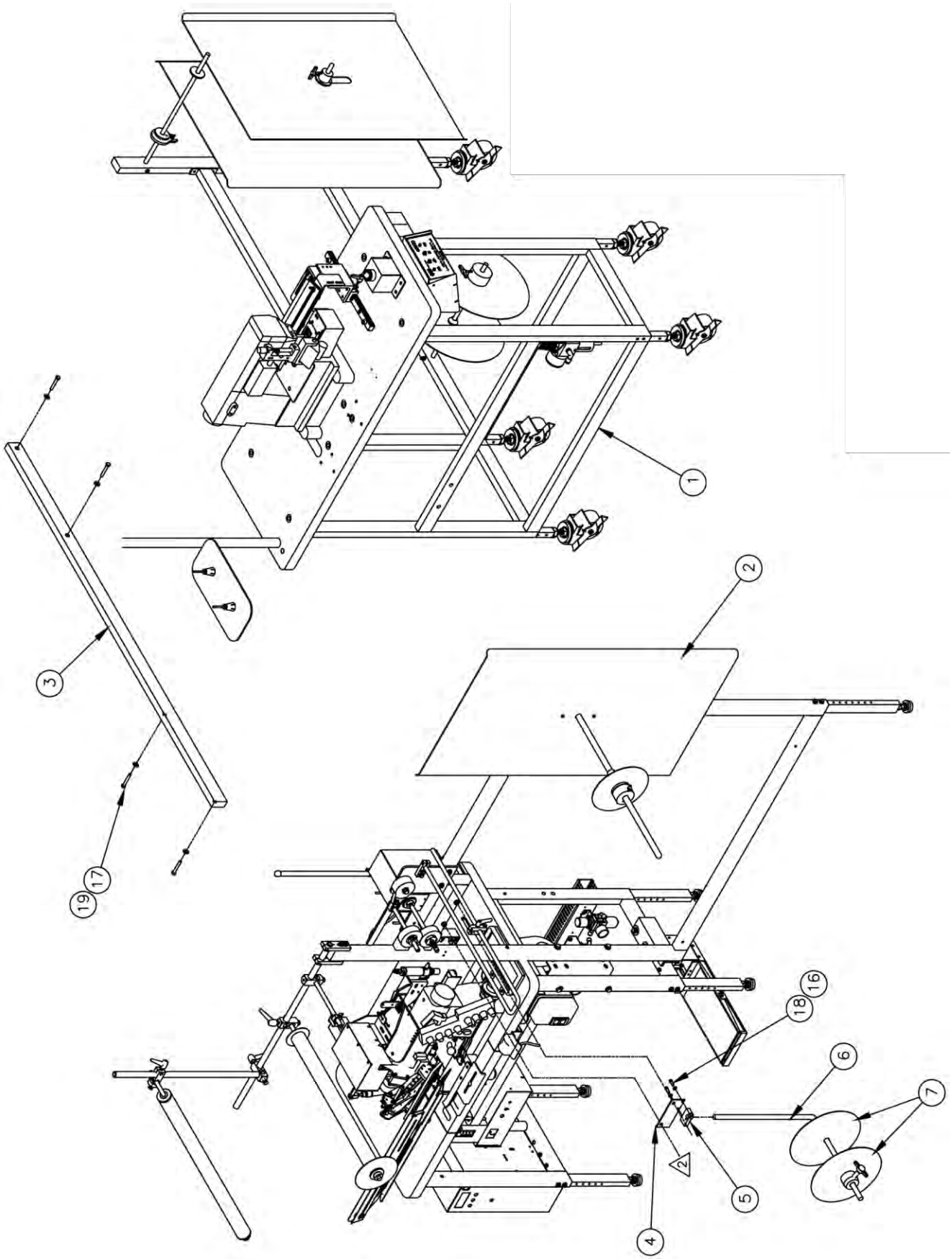
1
2
3
19
17
18
16
6
7
2
5
4

11335MGC-34U Manual Pillowtop Ruffler, HD

AAC Drawing Number 192074B Rev2

NO.	QTY	PART #	DESCRIPTION
1	1	1334S-02	Auto Flang Workstation
2	1	11335MGC-SU	Cont. Foundation Ruffler
3	1	1335-002	Joining Tube
4	1	1334035	Adaptor
5	1	3206007	Rod Clamp
6	1	A-2212A	Bent Rod
7	2	785-A95-06	Disc Assy.
8	AR	1335M-03	Instructional
9	AR	1335MFC-34WD2	Wiring Diagram
10	1	4060-0652	PC Board
11	1	A-2126L5/16	Folder
12	AR	EP-1335M34	Eprom
13	4	FF67F4079	PC Board Spacer
14	3'	FF8524-10	Blk Wire 22 Ga.
15	2'	FF8524-2	Red Wire 22Ga.
16	2	WWL1/4	Lock Washer
17	4	SSHC10112	Hex Cap Screw
18	2	SSHC01040	Socket Cap Screw
19	4	WWF5/16	Flat Washer
20	1	1335M-04	Cable W/HW Package

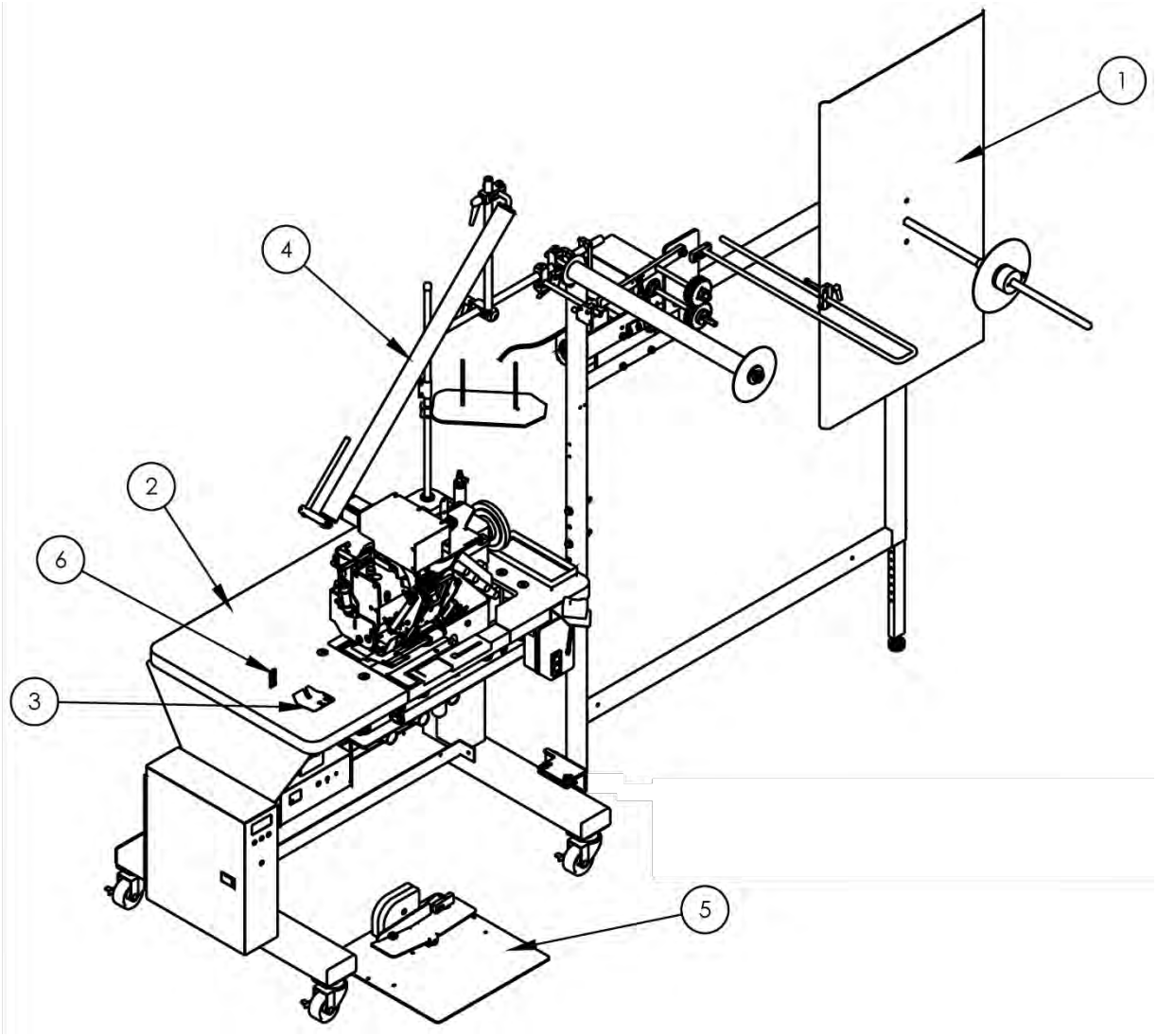

11335MGC-ER Continental Foundation Ruffler, ERGO

AAC Drawing Number 9004361 Rev0

NO.	QTY	PART #	DESCRIPTION
1	1	1335105	UNWINDER ASSY (K3)
2	1	1335991	RUFFLER, MAIN ASSY- ERGO
3	1	1335M-2002E	BLADE, RUFFLER, 2.25 X 12
4	1	1335M-430E	GUIDE ROLLER ASSY
5	1	4059-FP301D	FOOT PEDAL ASSY,EFKA
6	10	SN62X5924	NEEDLE, SIZE 180/24

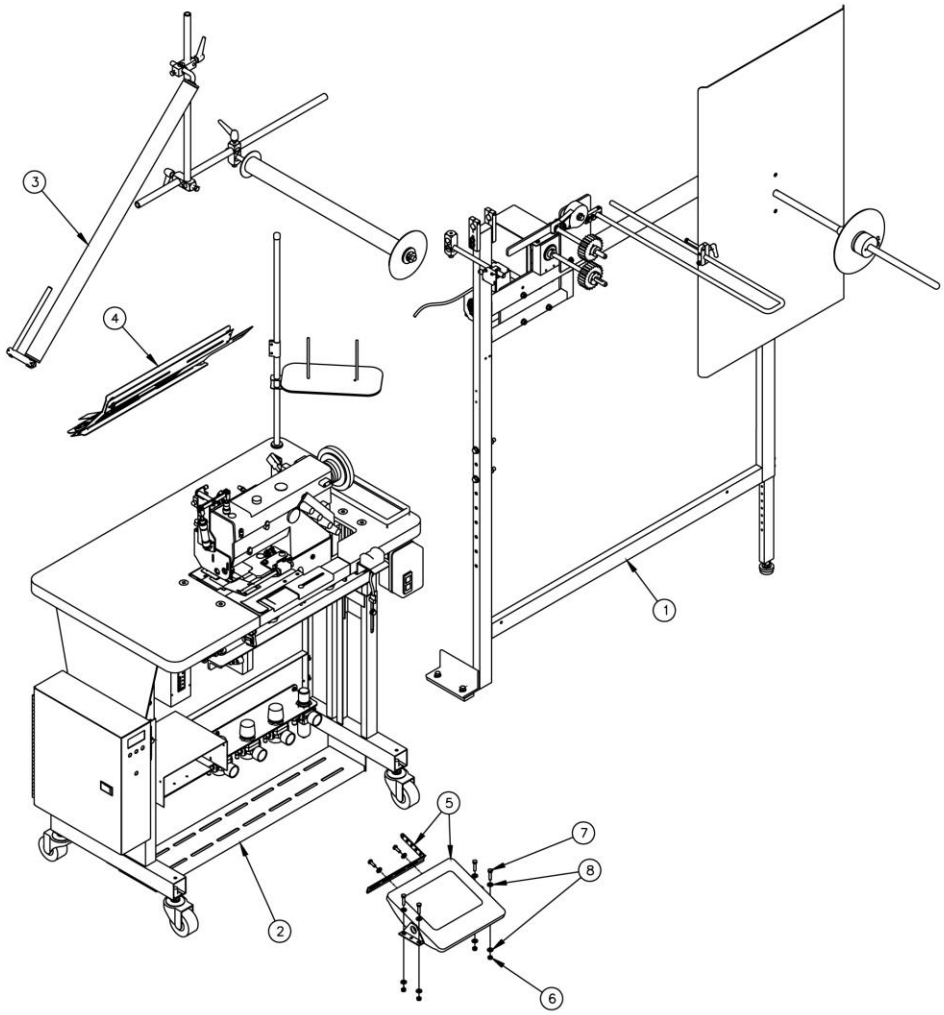

11335MGC-SD Continental Foundation Ruffler, HD

AAC Drawing Number 192101B Rev3

NO.	QTY	PART #	DESCRIPTION
1	1	1335105	Unwinder Assy.
2	1	1335105	Base Console
3	1	1335M-430E	Guide Roller Assy.
4	1	A-2216M5/16	Folder
5	1	k-340	Foot Pedal
6	4	NNK1/4-20	Nut, Kep 1/4-20
7	4	SSHC1048	Screw, Hex Cap 1/4-20x3/4
8	10	WWFS1/4	Washer, Flat, SAE, #1/4

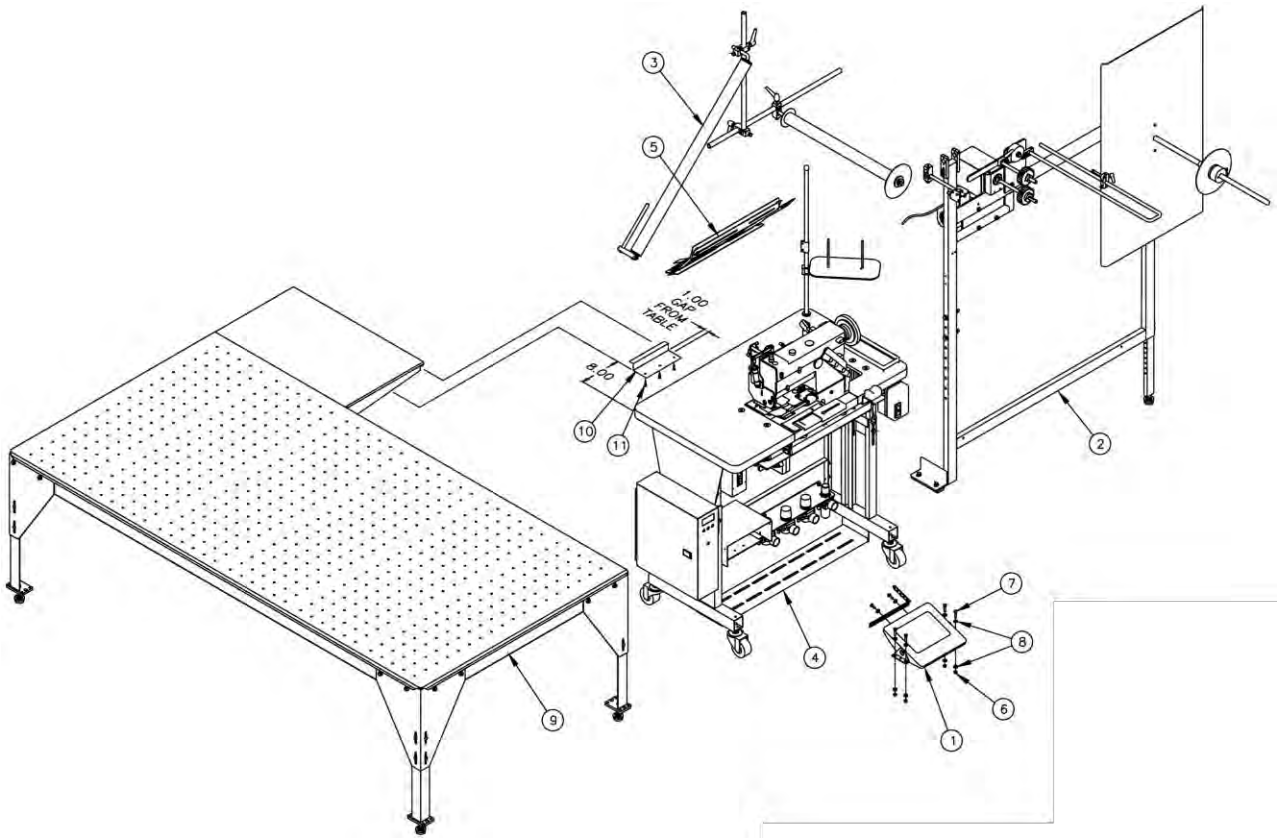

11335MGC-SDAT Continental Foundation Ruffler, 18", CS

AAC Drawing Number 192964C Rev5

NO.	QTY	PART #	DESCRIPTION
1	1	K-340	Foot Pedal
2	1	1335105	Pwr RLR Unwinder Assy
3	1	1335M-430E	Guide Roller Assy.
4	1	1335307	Generic Console
5	1	A-2216M5/16	Cont. Book Folder
6	6	NNK1/4-20	Kep nut
7	6	SSHC01048	Hex Cap Screw
8	12	WWFS1/4	Flat Washer SAE
9	1	11337AT	Air Table Assy.
10	1	1335081	Shelf Support
11	3	SSZH#10064	Sheet Metal Screw
12	10	SN62X5924	Needle 180/24
13	1	1335M-2002E	Ruffler Blade, HD

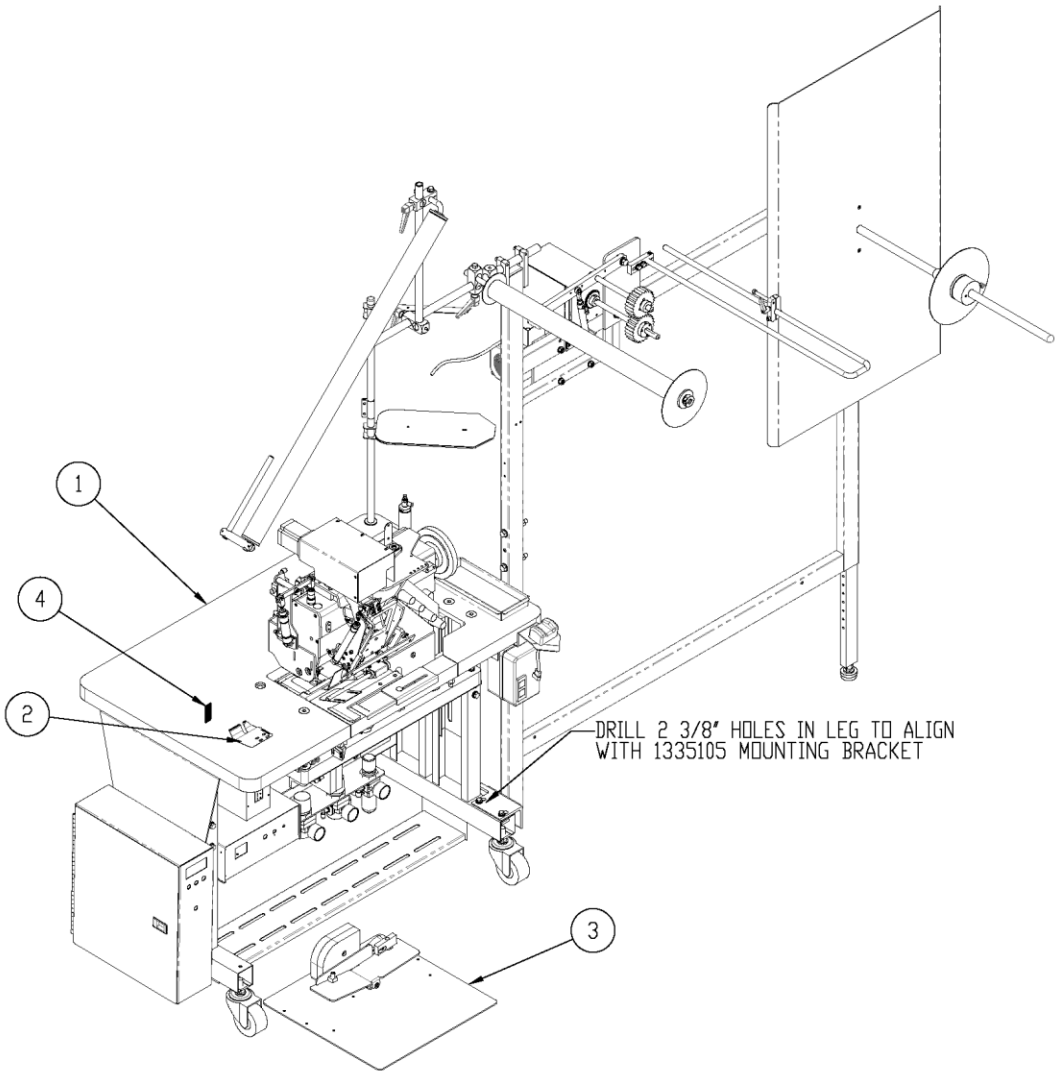

11335MGC-SU Continental Foundation Ruffler, HD

AAC Drawing Number 9000277 Rev6

NO.	QTY	PART#	DESCRIPTION
1	1	1335307	RUFFLER, MAIN ASSY- MG200
2	1	1335M-2002E	BLADE, RUFFLER, 2.25 X 12
3	1	4059-FP301D	FOOT PEDAL ASSY,EFKA
4	10	SN62X5924	NEEDLE, SIZE 180/24

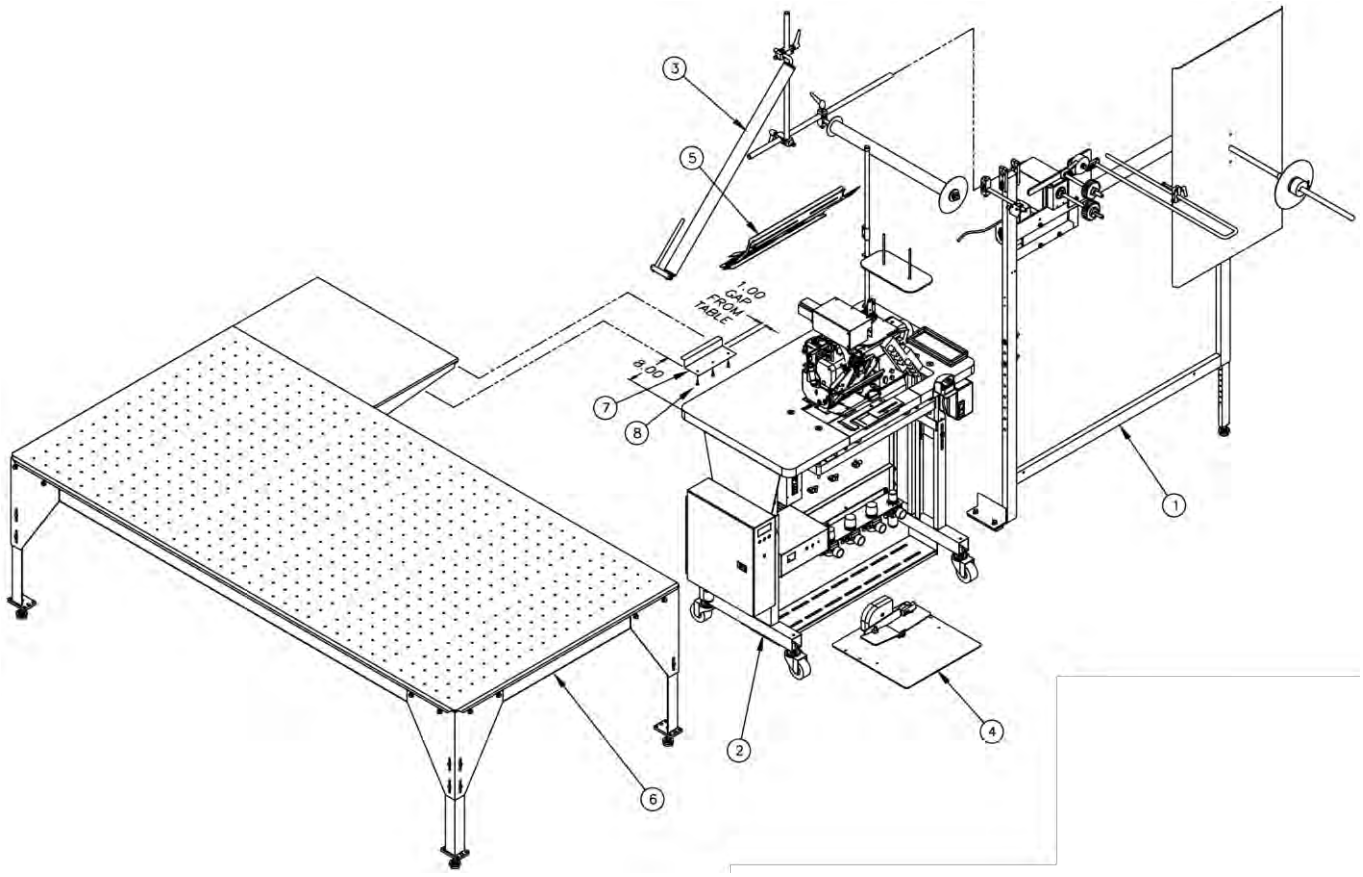

11335MGC-SUAT Continental Foundation Ruffler, HD

AAC Drawing Number 192966C Rev6

NO.	QTY	PART #	DESCRIPTION
1	1	1335105	Pwr RLR Unwinder Assy
2	1	1335307	Generic Console
3	1	1335M-430E	Guide Roller Assy.
4	1	4059-FP301D	Foot Pedal
5	1	A-2216M5/16	Folder
6	1	11337AT	Air Table Assy.
7	1	1335081	Shelf Support
8	3	SSZH#10064	Sheet Metal Screw
9	10	SN62X5924	Needle 180/24
10	1	1335M-2002E	Ruffler Blade, HD

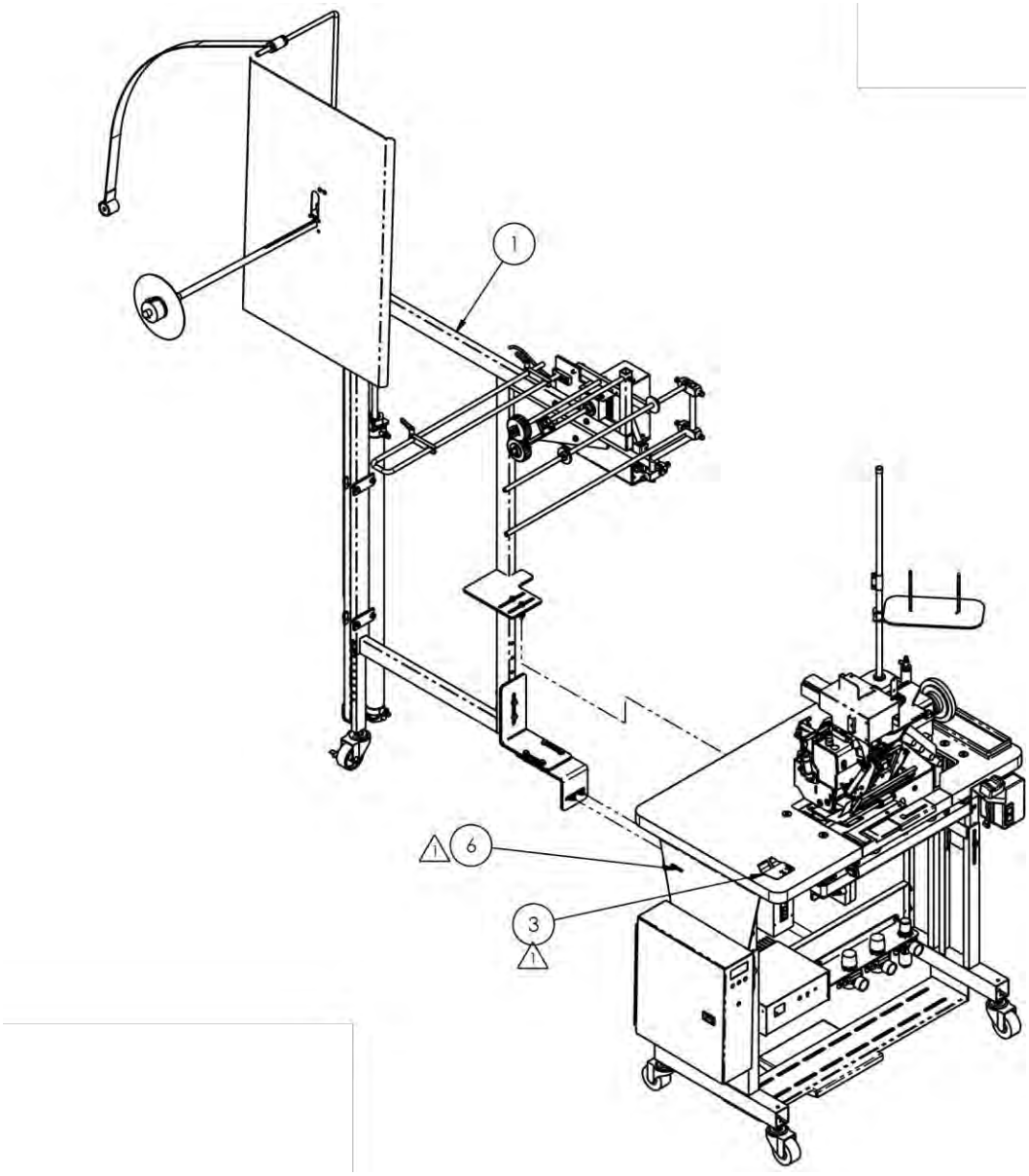

11335MGR Continental Foundation Ruffler, MD

AAC Drawing Number 9000243 Rev2

NO.	QTY	PART #	DESCRIPTION
1	1	1335155	UNWINDER ASSEMBLY
2	1	1335307	RUFFLER, MAIN ASSY- MG200
3	1	1335M-2002E	BLADE, RUFFLER, 2.25 X 12
NS	AR	1335MF-PD	PNEUMATIC DIAGRAM
NS	AR	1335MGR-WD	WIRING DIAGRAM
6	10	SN62X5924	NEEDLE,SIZE 180/24

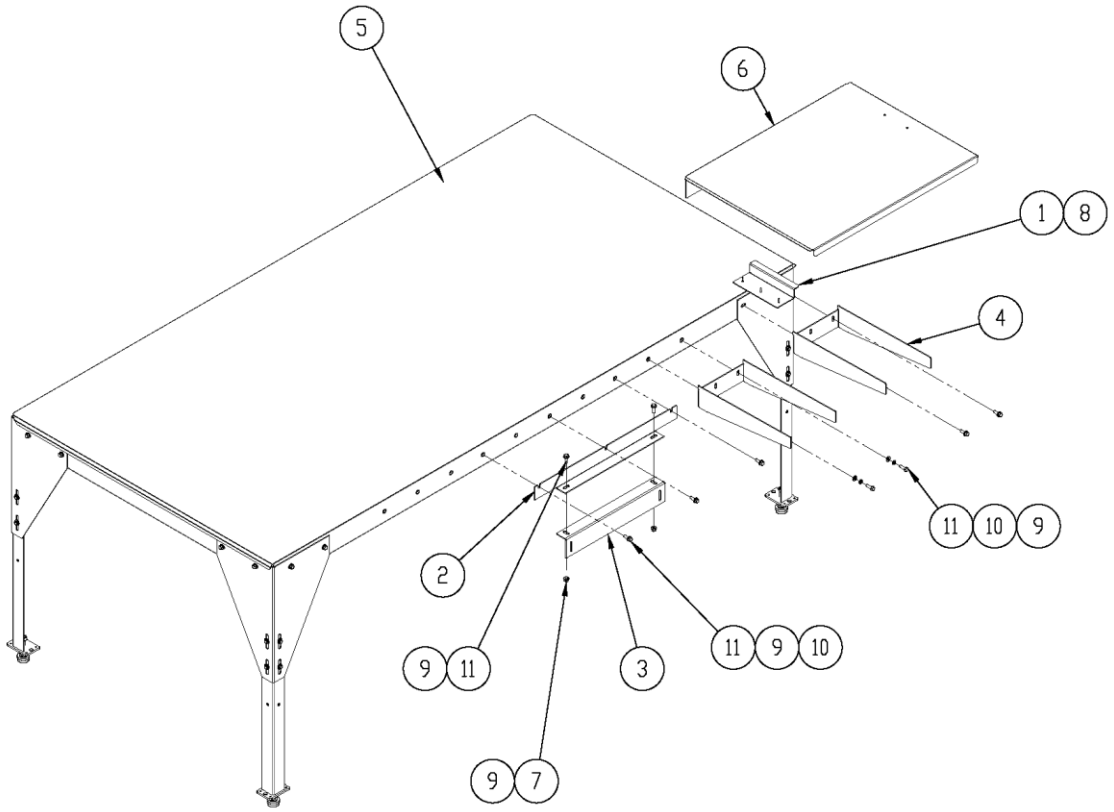

11337AT Air Table Assembly, Universal

AAC Drawing Number 9002611 Rev5

NO.	QTY	PART#	DESCRIPTION
1	1	1335081	SUPPORT, SHELF
2	1	1337023	BRACKET, TABLE TOP RUFFLR
3	1	1337024	MOUNT, AIR TABLE
4	2	1337A-0168B	BRACKET, RETAINER
5	1	1337A-160	AIR TABLE ASSY,SINGLE TBL
6	1	1337A-175C	SHELF, AIR TABLE,23"X30"
7	2	NNK5/16-18	KEP NUT, 5/16-18
8	3	SSZH#10048	SCREW,SHT.METAL HEX 10
9	9	WWFS5/16	WASHER,FLAT,SAE,5/16
10	5	WWL5/16	WASHER, LOCK, 5/16
11	7	SSHC10064	5/16-18 X 1 HHCS

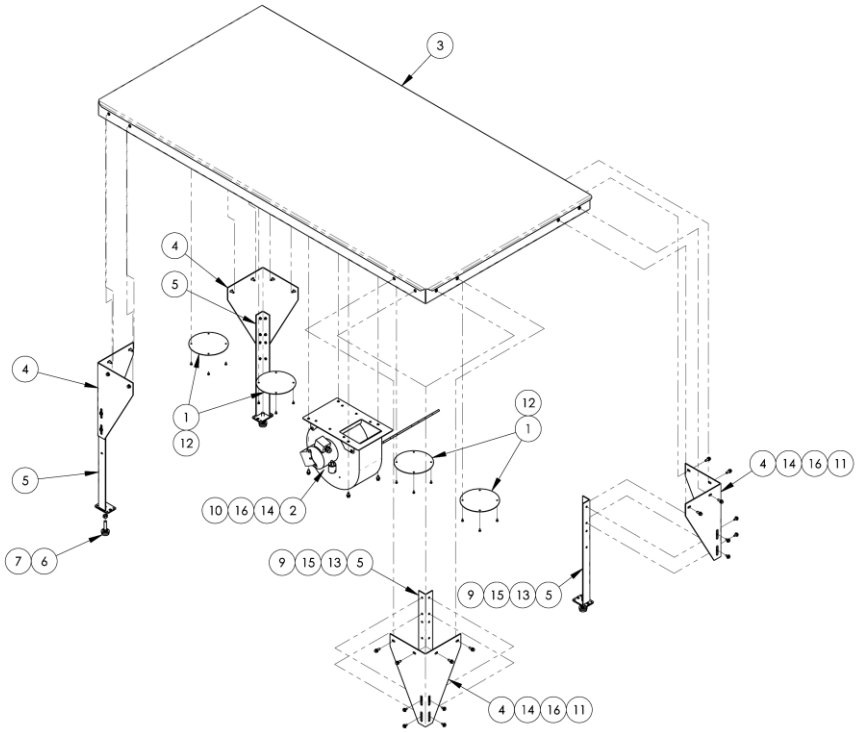

1337A-160 Air Table Assembly, Single Table

AAC Drawing Number 1337296 Rev9

NO	QTY	PART #	DESCRIPTION
1	4	1335-159	ACCESS COVER
2	1	1337860	BLOWER ASSY,1/6 HP
3	1	1337A-150	AIR TABLE ASSY
4	4	1337A-0161	ANGLE, CORNER
5	4	1337A-0163	WELDMENT, LEG, TABLE
6	4	MMFB4444	FOOT, RUBBER
7	4	NNH1/2-13	NUT,HEX,1/2-13
9	16	SSHC01048	1/4-20 X 3/4 HEX CAP
10	4	SSHC10048	5/16-18 X 3/4 HHCS
11	16	SSHC10064	5/16-18 X 1 HHCS
12	28	SSZH#10032	SCREW,SHT.METAL HEX 10
13	16	WWF1/4	WASHER, FLAT, 1/4", COM
14	20	WWFS5/16	WASHER,FLAT,SAE,5/16
15	16	WWL1/4	WASHER,LOCK, 1/4
16	20	WWL5/16	WASHER,LOCK, 5/16

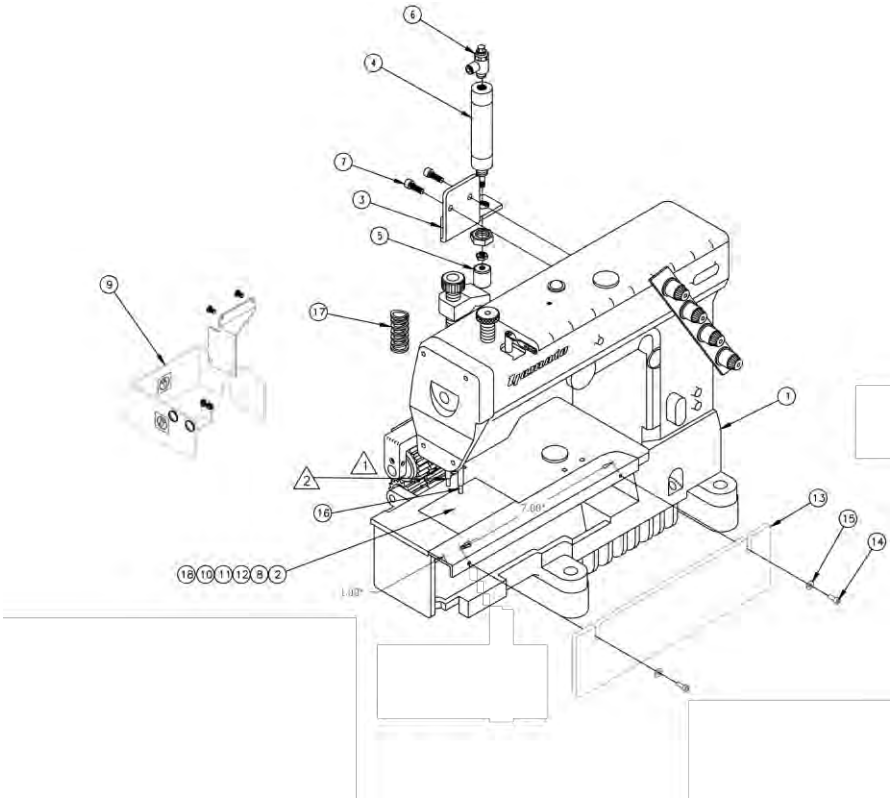

1334-1000A Sewing Head Detail

AAC Drawing Number 192557C Rev3

NO.	QTY	PART #	DESCRIPTION
1	1	SYAM-1804A	Yamato Sew Head
2	1	1862N94016	Needle Holder
3	1	112013	Brkt
4	1	AAC6S-1-H	Air Cylinder
5	1	11200A	Bumper
6	1	AA198RR508	Flow Control
7	2	SSSCM6X20	Screw, Socket Cap
8	1	54242B9016	Spreader
9	1	1959-412	Guard
10	1	54205A9016	Feed Dog
11	1	54420X9016	Presser Foot
12	1	54224A9016	Throat Plate
13	1	1334041	Guard
14	2	SSSC98032	Screw, Socket Cap
15	2	WWFS10	Flat Washer
16	1	3300012M	Needle Bar Mod
17	1	RRLC105J10	Puller Spring
18	1	1862N95016	Looper Holder
19	10	SN11318GB	Needle, Sys UY113,size 18

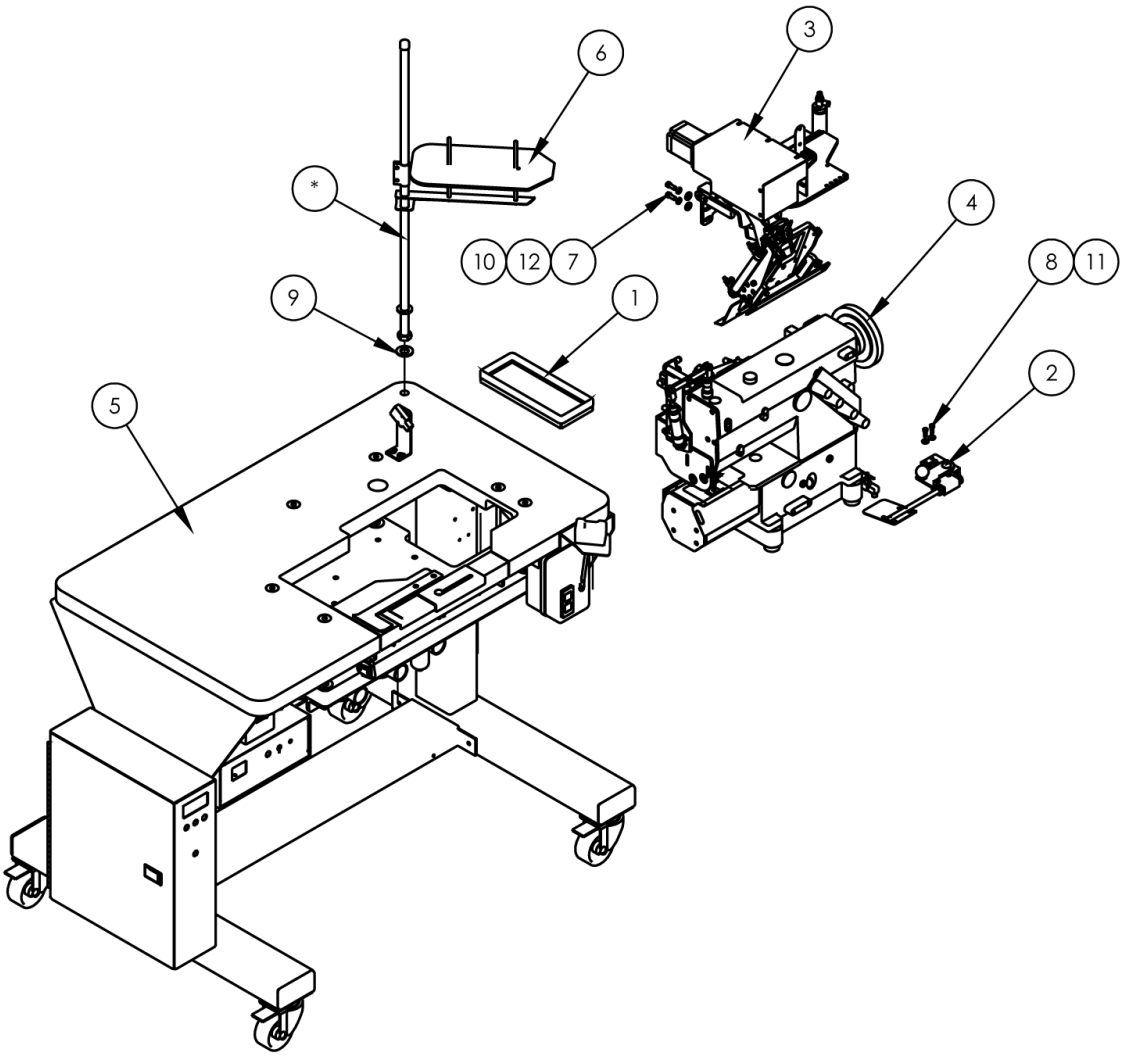

1335991 Ruffler Main Assembly, ERGO

AAC Drawing Number 1335991 Rev0

NO.	QTY	PART #	DESCRIPTION
1	1	26151	TOOL TRAY, 1X3.5X9
2	1	1335181	STRIPPER BLADE ASY,1335MG
3	1	1335294	RUFFLER ASSEMBLY
4	1	1335427	SEW HEAD ASSY,1335MG
5	1	1335992	STAND / MOTOR ASSY- ERGO
6	1	1959-112	2 POS THREAD PLATE ASSY
7	2	SSSC05040	1/4-28 X 5/8 SOC CAP
8	2	SSSC98040	#10-32 X 5/8 SOC CAP
9	1	WWF5/8	WASHER, FLAT, 5/8
10	2	WWFS1/4	WASHER FLAT, 1/4
11	2	WWFS10	WASHER, FLAT #10
12	2	WWL1/4	1/4 LW

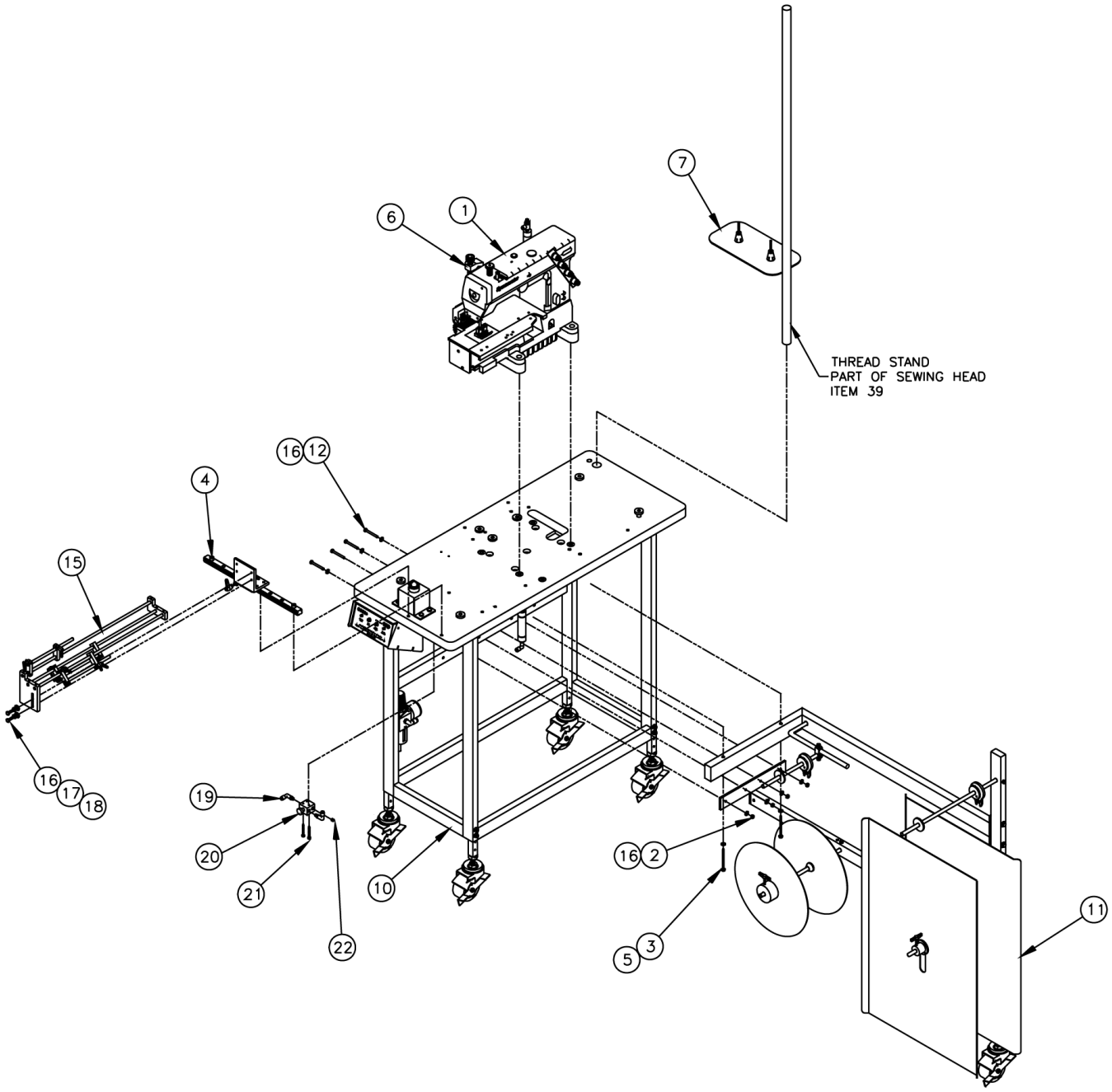
7
6
1
THREAD STAND
PART OF SEWING HEAD
ITEM 39
16
12
4
15
16
17
18
19
20
21
22
10
16
2
5
3
11

1334S-02 Auto Flanging Workstation

AAC Drawing Number 192070B Rev3

NO.	QTY	PART #	DESCRIPTION
1	1	1334-1000A	SEWING HEAD ASSY
2	4	NNK1/4-20	KEP NUT
3	2	SSZH#10192	SHEET METAL SCREW
4	1	1334-1100D	FOLDER MOUNT
5	2	WWFS10	FLAT WASHER
6	1	RRLC105J10	SPRING
7	1	1959-112	2 POS THREAD PLATE ASSY
8	1	1334-3012	CABLE
9	1	AATPWL1	WIRE LOOM
10	1	1959-700B	TABLE & FRAME
11	1	1959-800	ROLL HOLDER
12	4	SSHC01128	HEX CAP SCREW
13	AR	1959-PD	PNEUMATIC DIAGRAM
14	AR	1334S-02WD	WIRING DIAGRAM
15	1	1334-1200A	MATERIAL GUIDE
16	10	WWFS1/4	FLAT WASHER
17	2	SSHC01064	HEX CAP SCREW
18	2	WWL1/4	LOCK WASHER
19	2	AAQME-5-8	QUICK MALE ELBOW
20	1	AAVMB43	VALVE
21	2	SSZH#6096	HEX SCREW
22	1	MM4554K11	PIPE PLUG 1/8 NPT
23	1	PART #	PULLEY, VBELT, 58MM
24	1	1334-1000A	WASHER, PULLEY

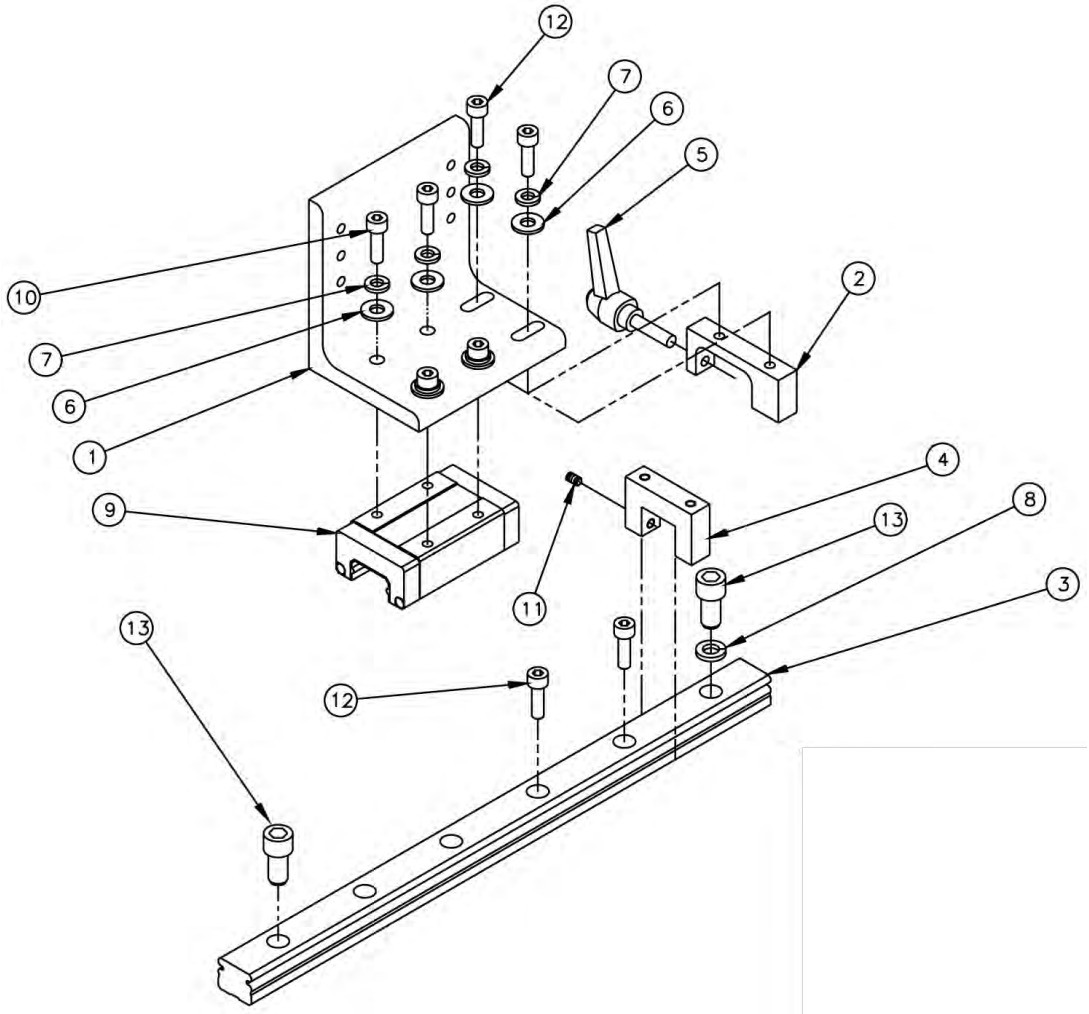

1334-1100D Folder Mount Assembly, Flanger

AAC Drawing Number 192929C Rev1

NO.	QTY	PART #	DESCRIPTION
1	1	1334-1005	Lower Angle Mount
2	1	1334-1006	Lock Handle Mount
3	1	MMAGR25360M	Linear Rail
4	1	1335-310	Stop Block
5	1	TTH32416	Threaded Handle
6	6	WWFS1/4	Flat Washer
7	6	WWL1/4	Lock Washer
8	1	WWL3/8	Lock Washer
9	1	MMAGH25CAN	Bearing Block
10	4	SSSCM6X20	Screw, Socket Cap
11	1	SSSS98032	Screw, Socket Set
12	4	SSSC01048	Screw, Socket Cap
13	2	SSSC25048	Screw, Socket Cap

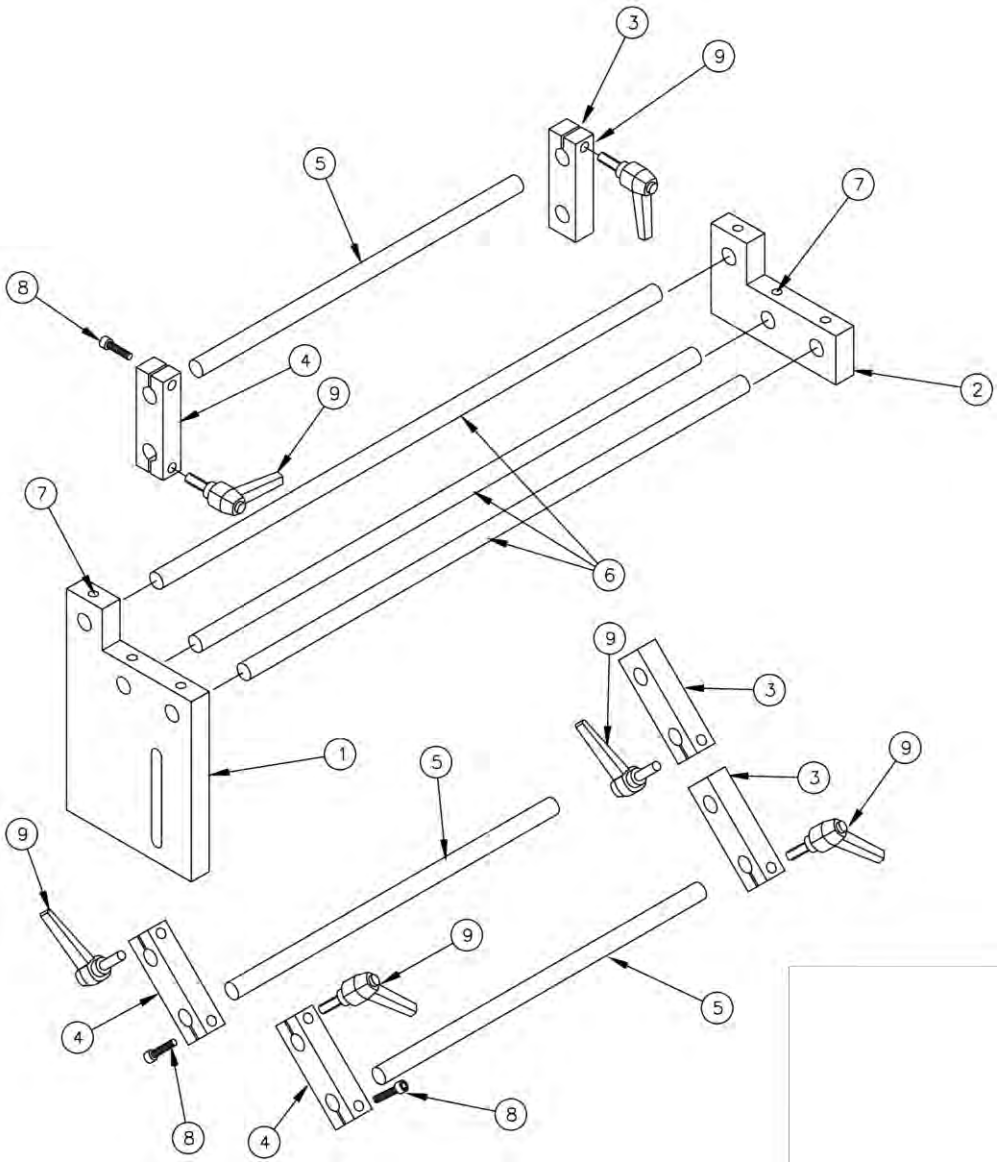

1334-1200A Material Guide Assembly

AAC Drawing Number 192092B Rev0

NO.	QTY	PART #	DESCRIPTION
1	1	1334-1023	Guide Mount
2	1	1334-1024	Support
3	3	1335-318	Rod Slide Arm
4	3	1335-319	Rod Clamp Arm
5	3	1335-320C	Rod, 3/8 x 9
6	3	1335Q-130A	Rod, 3/8 x 24
7	10	SSSS01024	Screw, Socket Set
8	3	SSSC95048	Screw, Socket Cap
9	6	TTH34311	Threaded Handle

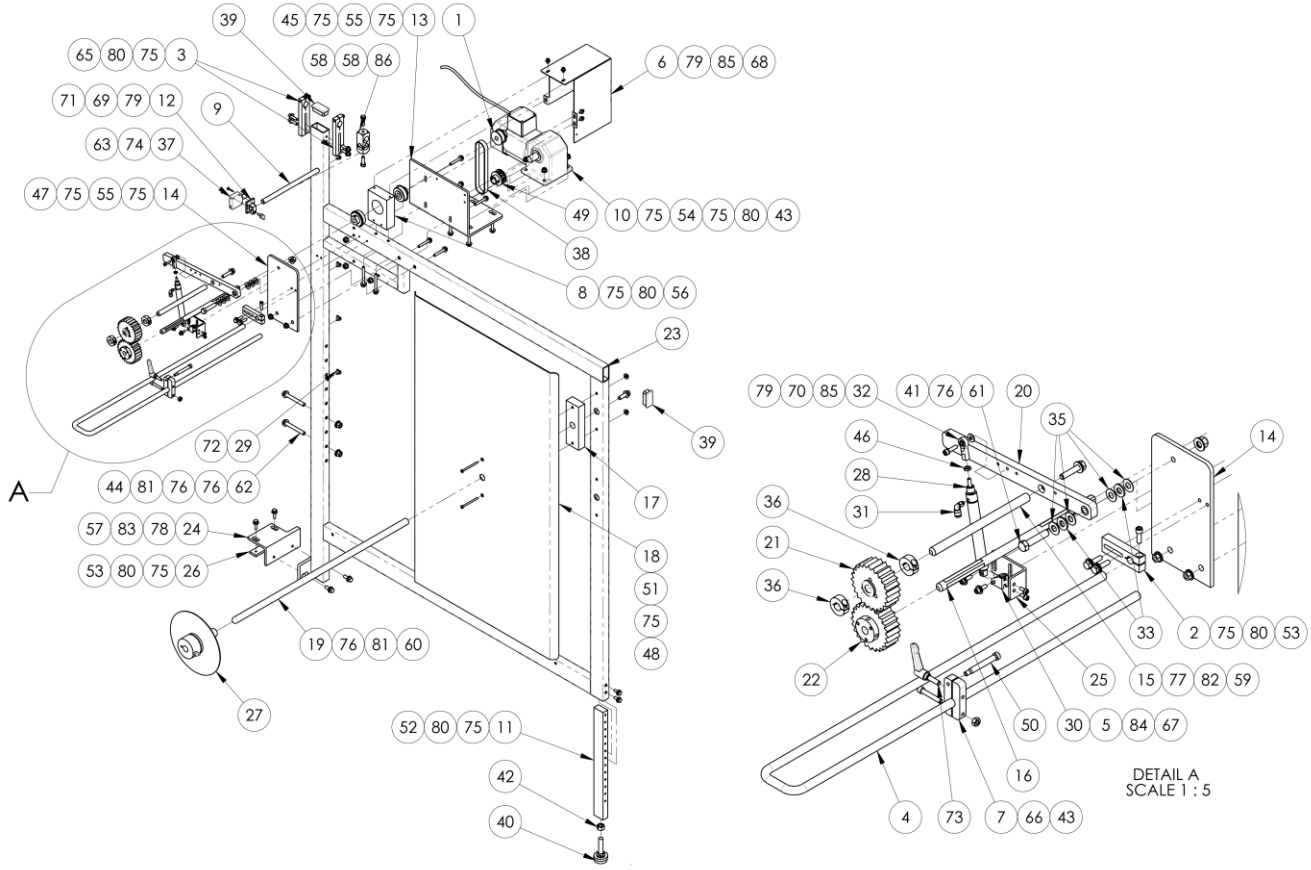
39
45 75 55 75 13
1
65 80 75 3
58 58 86
6 79 85 68
71 69 79 12
9
63 74 37
47 75 55 75 14
49 10 75 54 75 80 43
38
8 75 80 56
23
39
72 29
A
44 81 76 76 62
17
57 83 78 24
18
53 80 75 26
51
75
48
19 76 81 60
27
52 80 75 11
42
40
79 70 85 32
41 76 61
20
35
14
46
28
31
36
21
36
33
2 75 80 53
22
25
15 77 82 59
50
30 5 84 67
16
4
73
7 66 43
DETAIL A
SCALE 1 : 5

1335105 Unwinder Assembly

AAC Drawing Number 1335105 Rev17

ITEM NO.	QTY	PART NUMBER	DESCRIPTION	ITEM	QTY	PART NUMBER	DESCRIPTION
1	1	211-057	PULLEY, 3/8P, 12T,1/2B	44	2	NNH3/8-16	3/8-16 HEX NUT
2	1	1325-346	HOLDER,ROD,1/2 D,SLOT MNT	45	3	NNH3/8-16	5/16-18 HEX NUT
3	2	1325-346A	HOLDER, ROD, 3/4", SLOT	46	1	NNJ10-32	NUT,JAM,THIN #10-32
4	1	1335-837A	ROD,1/2 DIA, 180 DEG	47	2	NNK1/4-20	KEP NUT, 1/4-20
5	1	1335M-2046	PLATE,NUT,8-32@.43 CTC	48	2	NNK10-32	KEP NUT, 10-32
6	1	1335M-4007	COVER, BELT	49	1	PP12LF050-3/4	PULLEY,GEAR,3/8P,.50B,12T
7	1	1347-001	EDGE GUIDE,SPLIT,(2 PCS)	50	1	SSAS020128	5/16 X 2 1/4-20 SHLD, BOLT
8	1	1961-365	YOKE, BEARING	51	2	SSFC98240	#10-32 X 2.5 FLAT CAP
9	1	8732-0576	ROD, STRAIGHT, SS, 1/2 X	52	2	SSHC01048	1/4-20 X 3/4 HEX HEAD
10	1	23218DM	MOTOR ASSY,GEAR	53	4	SSHC01064	1/4-20 X 1 HEX HEAD
11	1	132556-273	LEG, 3/4 X 1-1/2 X 15 LG	54	4	SSHC01080	1/4-20 X 1-1/4 HEX HEAD
12	1	265156A	HOLDER, EYE, 1/2 BORE	55	5	SSHC01112	1/4-20 X 1-3/4 HEX HEAD
13	1	1335112	MOUNT,MOTOR	56	2	SSHC01160	1/4-20 X 2-1/2 HEX HEAD
14	1	1335115	MOUNT, PINCH ROLLER	57	2	SSHC10056	5/16-18 X 7/8 HHCS
15	1	1335116	DRIVE ROD, ROLLER	58	2	SSHC10064	5/16-18 X 1" HEX HEAD
16	1	1335117	SHAFT, DRIVE ROLLER	59	1	SSHC10096	5/16-18 X 1-1/2 HEX HEAD
17	1	1335118	MOUNT, DISC	60	1	SSHC25080	3/8-16 X 1-1/4 HEX HEAD
18	1	1335119	DISC	61	1	SSHC25112	3/8-16 X 1-3/4 HEX HEAD
19	1	1335139	ROD,SS,3/4 X 28.0L	62	2	SSHC25192	3/8-16 X 3 HEX HEAD
20	1	1335189	LINK, IDLER ROLLER	63	2	SSPS70048	#4-40 X 3/4 PAN HD SLOT
21	1	1335497	ROLLER, FLUTTED, IDLER,	64	1	SSSC01048	1/4-20 X 3/4 SOC CAP
22	1	1335498	DRIVE ROLLER, FLUTED,	65	4	SSSC01064	1/4-20 X 1 SOC CAP
23	1	1335771	UNWINDER FRAME (K3)	66	1	SSSC01096	1/4-20 X 1-1/2 SOC CAP
24	1	1335797	BRKT,SUPPORT	67	2	SSSC90024	#8-32 X 3/8 SOC CAP
25	1	1335864	BRACKET, CYLINDER	68	5	SSSC98024	#10-32 X 3/8 SOC CAP
26	1	1335897	PLATE,NUT,1/4-20@3.00 CTC	69	3	SSSC98040	#10-32 X 5/8 SOC CAP
27	1	33008708	DISC ASSY,8"	70	1	SSSC98048	#10-32 X 3/4 SOC CAP
28	1	AAC8DP-3	CYLINDER,AIR,DA	71	1	SSW#10	WING SCREW KNOB
29	5	AAF1/8	1/8" PLASTIC CLAMP	72	5	SSZS93032	SCREW, SHT.METAL 10 ZIP
30	1	AAFBP-8C	BRKT,PIVOT,5/32 BORE	73	1	TTH32415	HANDLE,THDED,1/4-20X7/8
31	1	AAQME-5-10	AIR ELBOW, 10-32 X 5/32	74	2	WWF4	WASHER, FLAT #4
32	1	BBAW-3Z	BRG,ROD END,F, 10-32	75	32	WWFS1/4	WASHER FLAT, 1/4
33	2	BBNTA613	BEARING,THRUST,375BORE	76	6	WWFS3/8	WASHER, FLAT, 3/8
34	2	BBS8701-88	BEARING,BALL,.50IDX1.75OD	77	1	WWFS5/16	WASHER, FLAT, 5/16
35	4	BBTRA613	WASHER,THRUST,STL, .375B	78	2	WWFS5/16	WASHER,FLAT,SAE,5/16
36	2	CCCL8F	CLAMP COLLAR- 1/2	79	9	WWFS10	WASHER, FLAT #10
37	1	FFQM42VN6A	EYE,ELECTRIC,10-30VDC	80	16	WWL1/4	1/4 LW
38	1	GG157L050	BELT,GEAR,3/8P,1/2W	81	3	WWL3/8	3/8 LW
39	2	MM132-1496	PLUG 1 X 2	82	1	WWL5/16	5/16 LW
40	1	MMFB4444	FOOT, RUBBER	83	2	WWL5/16	WASHER,LOCK, 5/16
41	1	NNE3/8-16	NUT, ELASTIC 3/8-16	84	2	WWL8	#8 LW
42	1	NNH3/8-16	3/8-16 HEX NUT	85	8	WWL10	#10 LW
43	5	NNH3/8-16	1/4-20 HEX NUT	86	1	SSHCM8X20	SCREW, HEX CAP

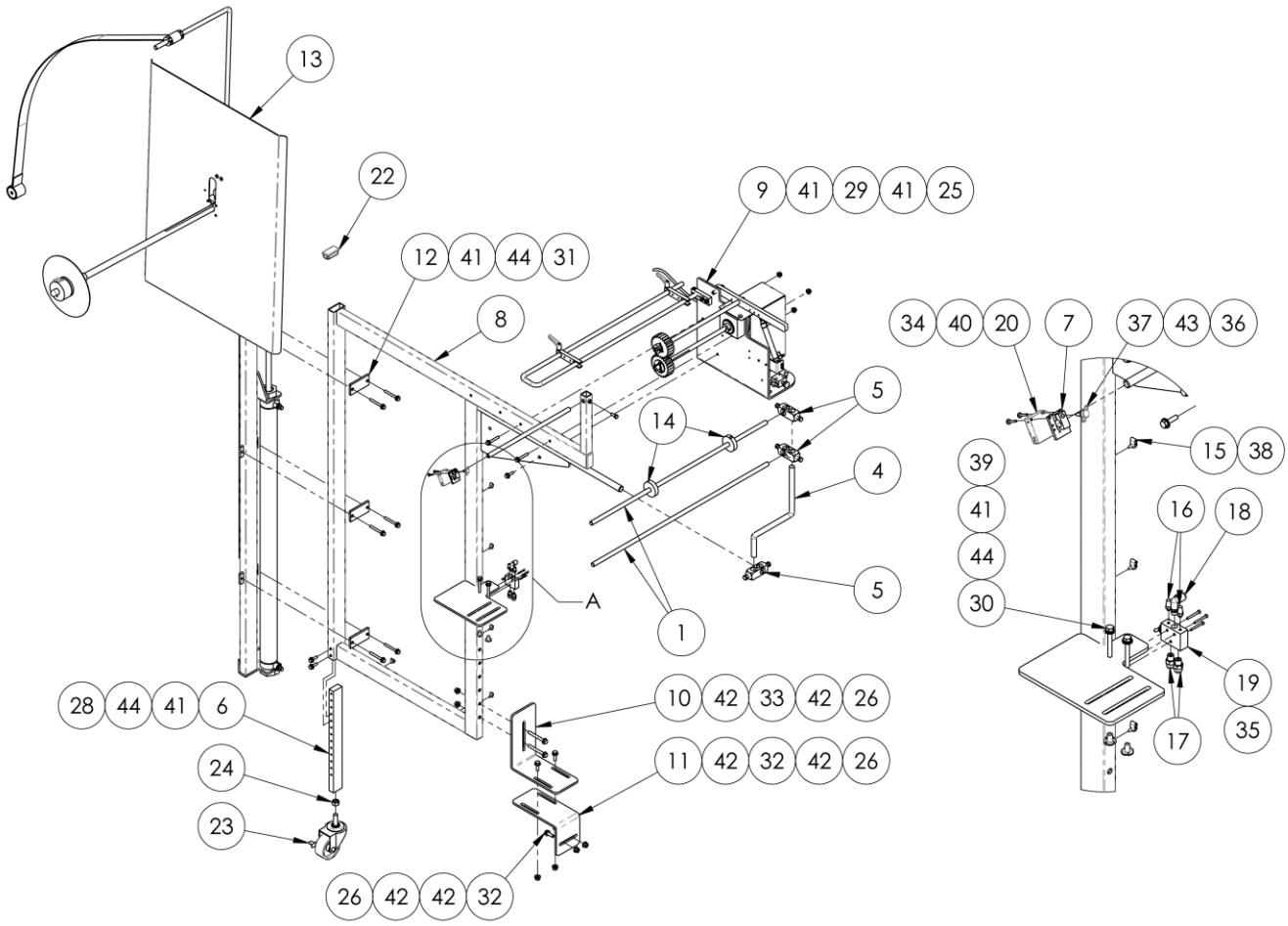
13
22
9 41 29 41 25
12 41 44 31
8
34 40 20 7 37 43 36
5
14
4
15 38
39
41
44
30
16 18
5
A
1
19
35
17
28 44 41 6
10 42 33 42 26
11 42 32 42 26
24
23
26 42 42 32

1335155 Unwinder Assembly

AAC Drawing Number 1335155 Rev6

ITEM NO.	QTY	PART #	DESCRIPTION
1	2	780-100	ROD,STRAIGHT,CRS,1/2
2	*1	1335-022	CABLE,3PIN FM MOLEX,7'L
3	1	8732-0896	ROD, STRAIGHT, CRS, 1/2 X
4	1	26220A	ROD, 5/8 DIA
5	3	28201	BLOCK,CROSS,(LARGE)
6	1	132556-273	LEG, 3/4 X 1-1/2 X 15 LG
7	1	265156A	HOLDER, EYE, 1/2 BORE
8	1	1335156	UNWINDER FRAME
9	1	1335194	MOTOR ASSY, UNWINDER
10	1	1335306	STABILIZER,UNWINDER
11	1	1335359	STABILIZER,UNWINDER,1335E
12	3	1335634	PLATE, WASHER, .312@2.500
13	1	1335740	ROLL HOLDER ASSY
14	2	A-4-032	EDGE GUIDE, 2" DIA, 1/2B
15	7	AAF1/8	1/8" PLASTIC CLAMP
16	2	AAF150-30A	MUFFLER,10-32
17	2	AAQMC-4-8	QUICK MALE CONNECT
18	1	AAQME-4-8	ELBOW,QUICK MALE,1/4X1/8
19	1	AAV41V	VALVE,TOGGLE
20	1	FFQM42VN6A	EYE,ELECTRIC,10-30VDC
21	*1	FFRK44T3P5	CABLE, EURO-3P
22	2	MM132-1496	PLUG 1 X 2
23	1	MM503022LB	CASTER, 3" LOCKING
24	1	NNH3/8-16	3/8-16 HEX NUT
25	3	NNK1/4-20	KEP NUT, 1/4-20
26	6	NNK5/16-18	KEP NUT, 5/16-18
27	1	SSHC01048	1/4-20 X 3/4 HEX HEAD
28	3	SSHC01064	1/4-20 X 1 HEX HEAD
29	2	SSHC01112	1/4-20 X 1-3/4 HEX HEAD
30	2	SSHC01128	1/4-20 X 2 HEX HEAD
31	6	SSHC01144	1/4-20 X 2-1/4 HEX HEAD
32	4	SSHC10064	5/16-18 X 1" HEX HEAD
33	2	SSHC10176	5/16-18 X 2-3/4 HEX HEAD
34	2	SSPS70048	#4-40 X 3/4 PAN HD SLOT
35	3	SSPS70064	#4-40 X 1 PAN HD SLOT
36	1	SSSC98040	#10-32 X 5/8 SOC CAP
37	1	SSW#10	WING SCREW KNOB
38	7	SSZH#10032	SCREW,SHT.METAL HEX 10
39	2	TTIW1/4-20	THREADED INSERT, WOOD
40	2	WWF4	WASHER, FLAT #4
41	16	WWFS1/4	WASHER FLAT, 1/4
42	12	WWFS5/16	WASHER, FLAT, 5/16
43	1	WWFS10	WASHER, FLAT #10
44	10	WWL1/4	1/4 LW

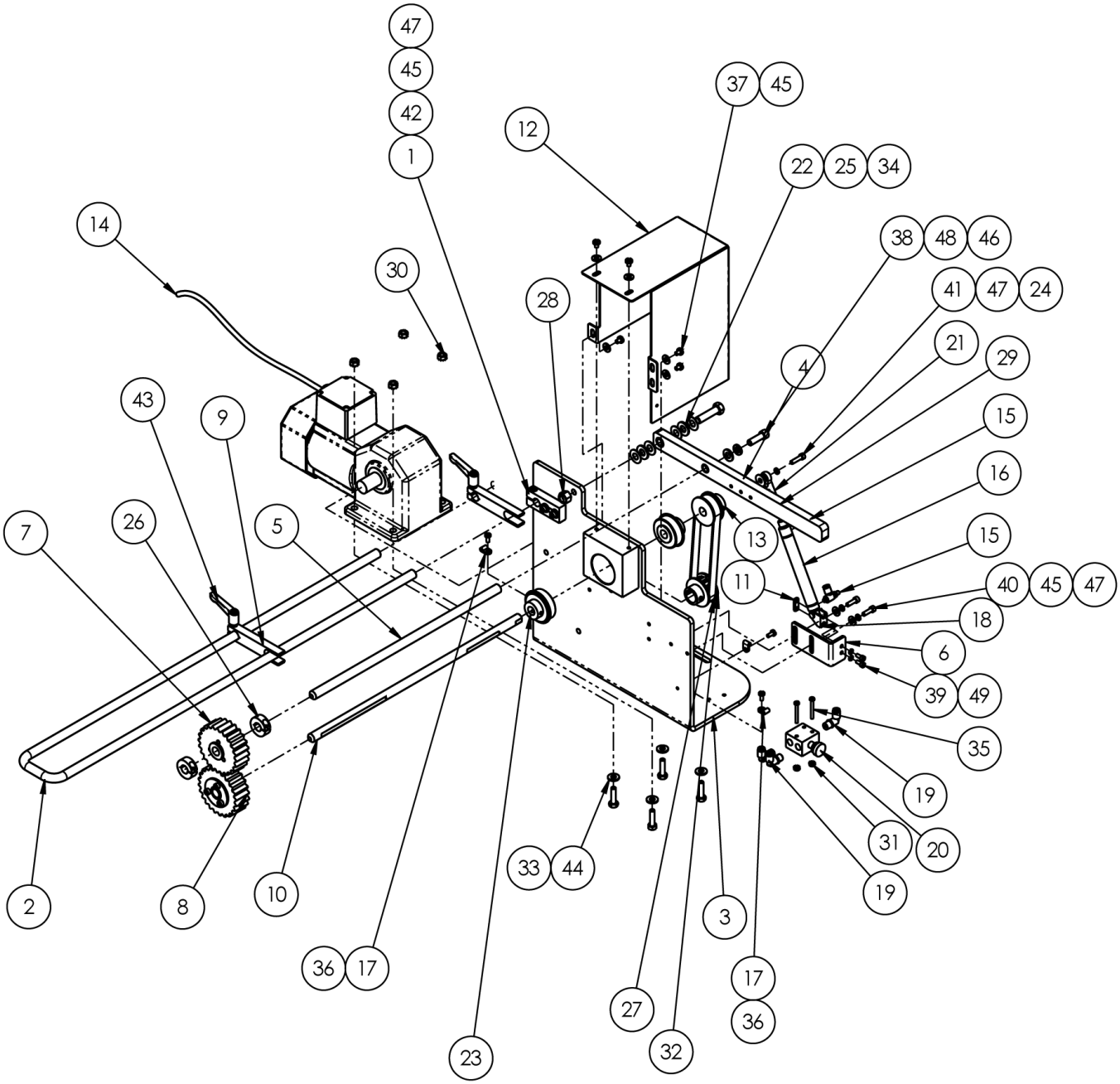
47
45
42
1
12
37
45
22
25
34
14
30
28
38
48
46
41
47
24
21
29
4
43
9
15
16
7
26
5
13
15
11
40
45
47
18
6
39
49
35
19
31
20
19
2
8
10
33
44
3
36
17
17
36
27
32
23

1335194 Unwinder Motor Assembly

AAC Drawing Number 1335194 Rev1

NO.	QTY	PART #	DESCRIPTON	NO.	QTY	PART #	DESCRIPTON
1	1	1325-346	HOLDER,ROD,1/2 D,SLOT MNT	26	2	CCCL8F	CLAMP COLLAR- 1/2
2	1	1335-837A	ROD,1/2 DIA, 180 DEG	27	1	GG157L050	BELT,GEAR,3/8P,1/2W
3	1	1335188	BRACKET, MOTOR WELDMENT	28	1	NNE3/8-16	NUT, ELASTIC 3/8-16
4	1	1335189	LINK, IDLER ROLLER	29	1	NNH10-32	#10-32 HEX NUT
5	1	1335192	DRIVE ROD, ROLLER	30	4	NNK1/4-20	KEP NUT, 1/4-20
6	1	1335193	BRACKET, CYLINDER	31	2	NNK6-32	KEP NUT, 6-32
7	1	1335497	ROLLER, FLUTTED, IDLER,	32	1	PP12LF050-3/4	PULLEY,GEAR,3/8P,.50B,12T
8	1	1335498	DRIVE ROLLER, FLUTTED	33	4	SSHC01064	1/4-20 X 1 HEX HEAD
9	2	1335499	ARM, 1/2" ROD CLAMP	34	1	SSHC25096	3/8-16 X 1-1/2 HEX HEAD
10	1	1335738	SHAFT, DRIVE ROLLER	35	2	SSPS80080	#6-32 X 1-1/4 PAN HD SLOT
11	1	1335M-2046	PLATE,NUT,8-32@.43 CTC	36	3	SSPS90024	#8-32 X 3/8 PAN HD SLOT
12	1	1335M-4007	COVER, BELT	37	5	SSPS98016	#10-32 1/4 PAN HD SLOT
13	1	211-057	PULLEY, 3/8P, 12T,1/2B	38	1	SSSC10064	5/16-18 X 1 SOC CAP
14	1	23218DM	MOTOR ASSY,GEAR	39	2	SSSC90024	#8-32 X 3/8 SOC CAP
15	2	AA198RA510	FLOW CONTROL,5/32X10-32	40	2	SSSC98040	#10-32 X 5/8 SOC CAP
16	1	AAC8DP-3	CYLINDER,AIR,DA	41	1	SSSC98048	#10-32 X 3/4 SOC CAP
17	3	AAF1/8	1/8" PLASTIC CLAMP	42	2	SSSC98064	#10-32 X 1 SOC CAP
18	1	AAFBP-8C	BRKT,PIVOT,5/32 BORE	43	2	TTH34311	HANDLE,THREADED,10-24X3/4
19	3	AAQME-5-8	QUICK MALE ELBOW	44	4	WWFS1/4	WASHER FLAT, 1/4
20	1	AAVMB43	SWITCH,AIR,3 WAY,W/EXH	45	9	WWFS10	WASHER, FLAT #10
21	1	BBAW-3Z	BRG,ROD END,F, 10-32	46	1	WWFS5/16	WASHER, FLAT, 5/16
22	2	BBNTA613	BEARING,THRUST,375BORE	47	5	WWL10	#10 LW
23	2	BBS8701-88	BEARING,BALL,.50IDX1.75OD	48	1	WWL5/16	5/16 LW
24	1	BBTRA411	WASHER,THRUST,STEEL	49	2	WWL8	#8 LW
25	4	BBTRA613	WASHER,THRUST,STL, .375B				

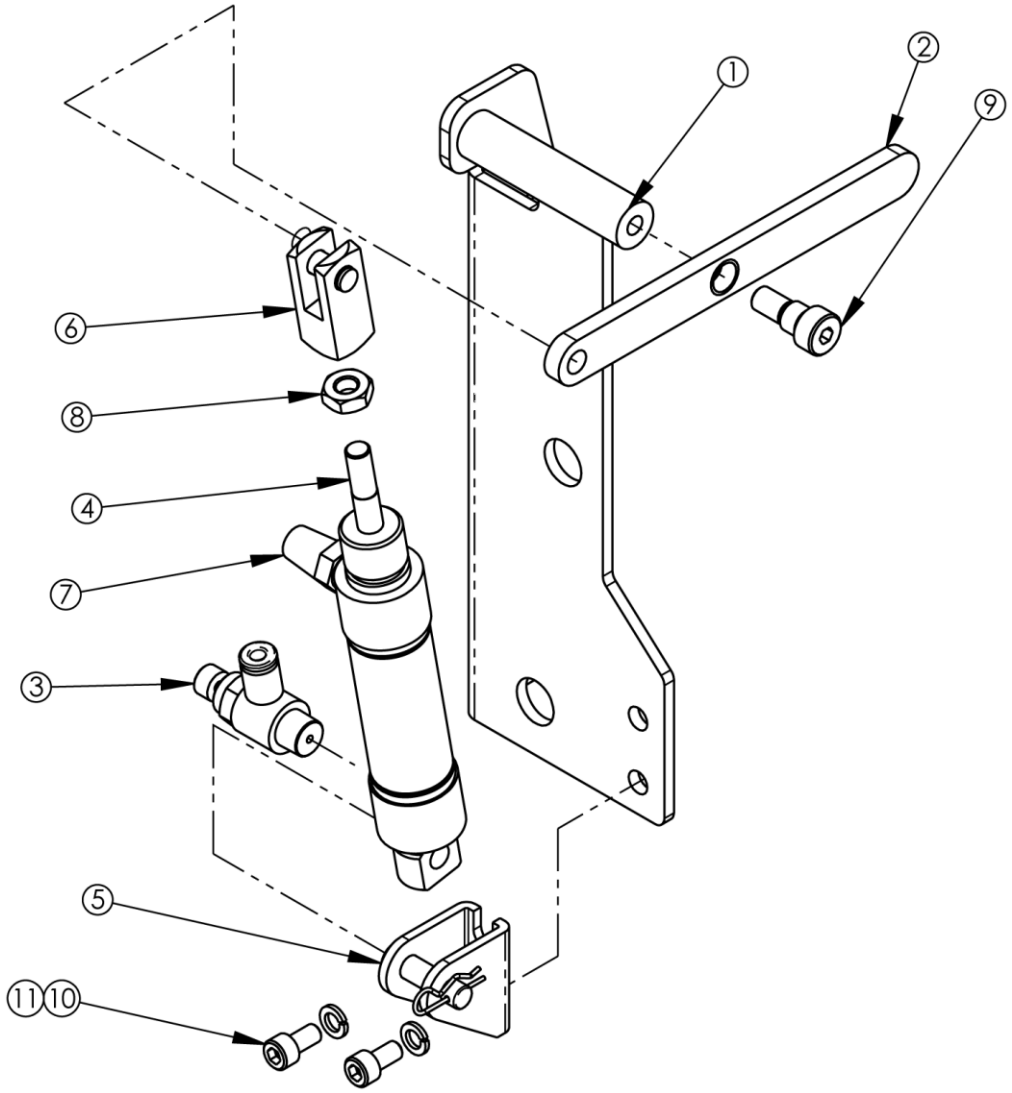

1335271 Foot Pressure Assembly

AAC Drawing Number 1335271 Rev2

NO.	QTY	PART #	DESCRIPTION
1	1	1335207	MTG BRKT, FOOT LIFT
2	1	1335M-108	LEVER
3	1	AA198RR508	FLOW CONTROL,5/32 X 1/8"
4	1	AAC7DP-.5	CYLINDER,AIR,DA
5	1	AAFBP-11C	BRKT,PIVOT,1/4 BORE
6	1	AAFCT-7	CLEVIS,AIR CYL, 1/4-28
7	1	AAFP18	MUFFLER,1/8 NPT, BRONZ
8	1	NNJ1/4-28	1/4-28 HEX JAM NUT
9	1	SSAS020016	SHOULDER BOLT 1/4 X 1/4L
10	2	SSSC98024	#10-32 X 3/8 Lg. SHCS
11	2	WWLM6	M6 LOCK WASHER

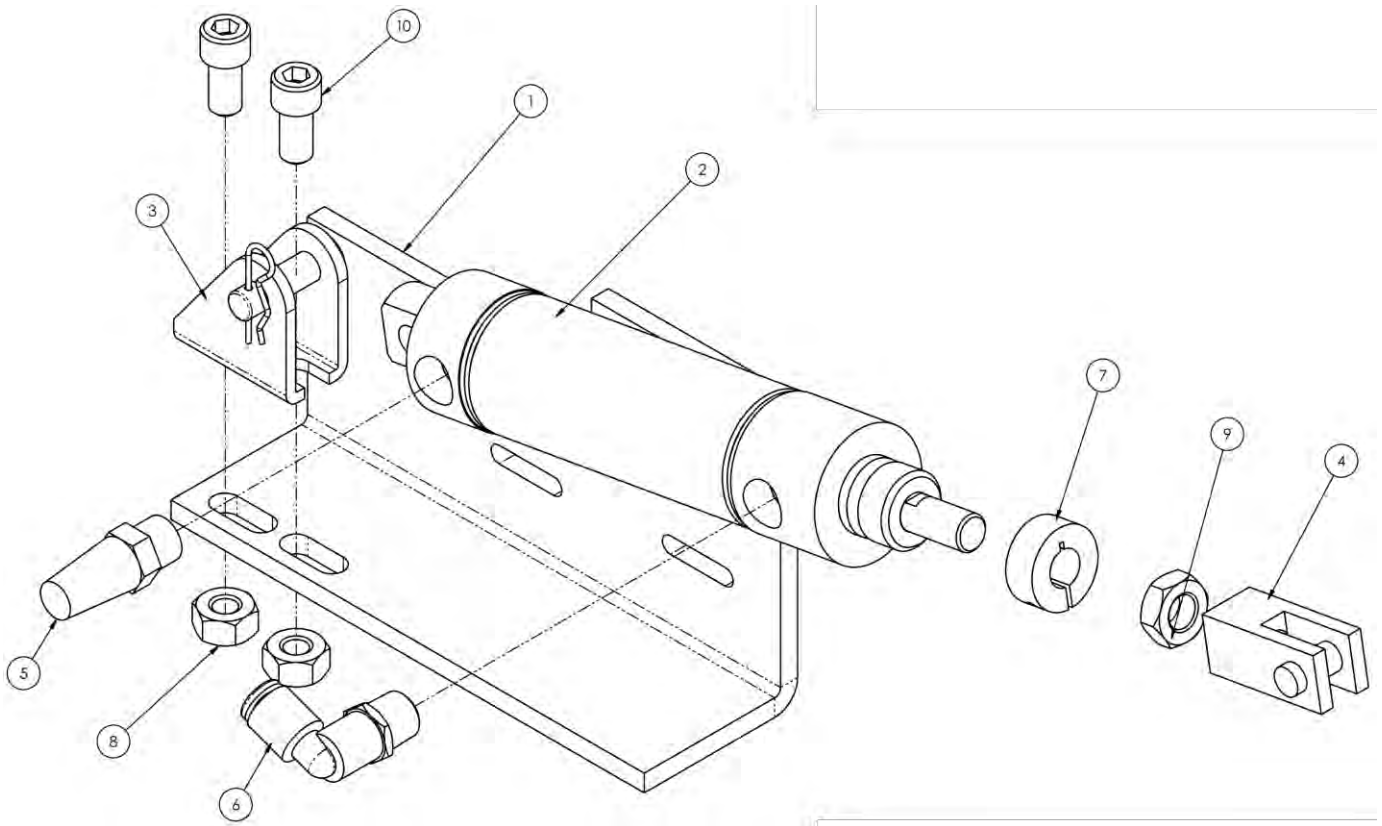

1335426 Puller Lift Assembly

AAC Drawing Number 1335426 Rev1

NO.	QTY	PART #	DESCRIPTION
1	1	132556-148D	BRACKET PULLER LIFT-HD
2	1	AAC6DX-1.5	CYLINDER,AIR,DA,PIVOT
3	1	AAFBP-11C	BRKT,PIVOT,1/4 BORE
4	1	AAFCT-11	CLEVIS, CYL, 5/16-24 ,1/4
5	1	AAFP18	MUFFLER,1/8 NPT, BRONZ
6	1	AAQME-5-8	QUICK MALE ELBOW
7	1	CCCL5F	CLAMP COLLAR,5/16" BORE
8	2	NNH1/4-20	1/4-20 HEX NUT
9	1	NNJ5/16-24	5/16-24 HEX JAM NUT
10	2	SSSC01032	1/4-20 X 1/2 SOC CAP

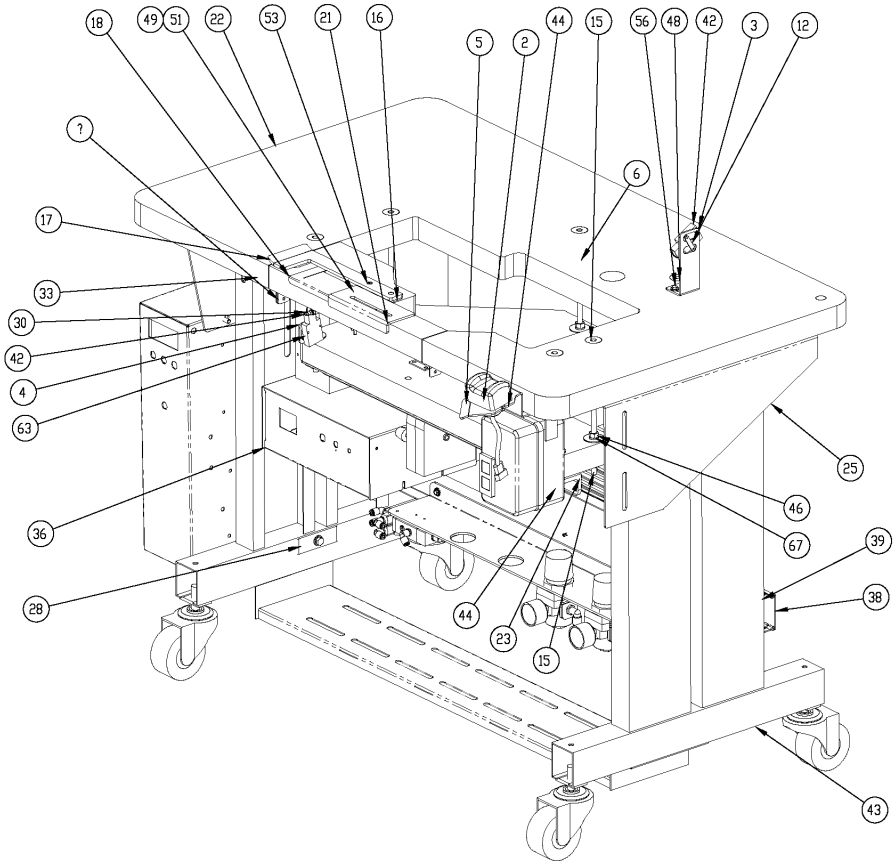
18
49
51
22
53
21
16
5
2
44
15
56
48
42
3
12
?
6
17
33
30
42
4
63
25
46
67
39
38
36
28
44
23
15
43

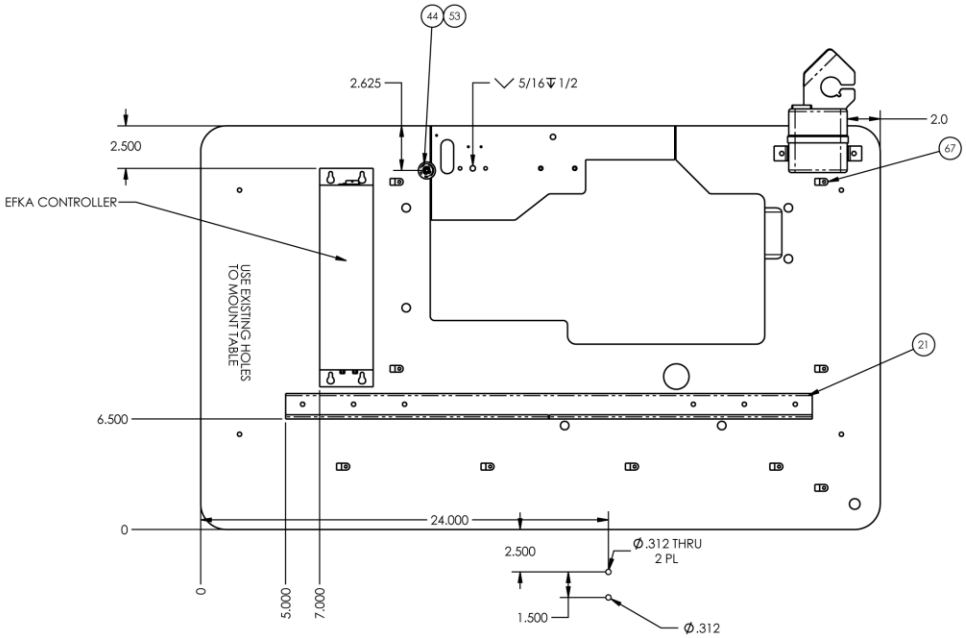
44
53
2.625
5/16↧1/2
2.0
67
2.500
EFKA CONTROLLER
USE EXISTING HOLES
TO MOUNT TABLE
21
6.500
0
24.000
2.500
Ø.312 THRU
2 PL
0
5.000
7.000
1.500
Ø.312

1335293 Stand / Motor Assembly-MG200

AAC Drawing Number 1335293 Rev15

NO.	QTY	PART#	DESCRIPTION	NO.	QTY	PART#	DESCRIPTION
NS	1	0211-702A	CABLE,POSITION SENSOR	35	3	AAQUY-5-5	QUICK UNION Y, 5/32
2	1	1278-6602A	TOUCH SWITCH ASSEMBLY	36	1	AP-28-800Y1A	BOX,STEPPER,H.S. (X5),2A
3	1	1278-6689B	BRACKET, EYE MOUNT	NS	1	EE37F3312	CORD,POWER,BELDEN TYPE
4	1	1278-6689D	TABLE EYE MOUNT	38	2.8 FT	EEDC2X2	COVER,WIRE DUCT
5	1	1278-6718A	BRKT,OPTO TOUCH SWITCH	39	2.8 FT	EEDF2X2	DUCT,WIRE,2X2, MOD
6	1	1335M-05	SUPPORT,TABLE,1335M	NS	1	FFHBL4579C	RECEPTICLE,3 POLE,3W
7	4	1335M-114	HINGE BRACKET	41	1	FFRK44T3P5	CABLE,EURO-3P MOEX,5'
8	AR	1335M-LAB	LABELS	42	2	FFSM312LVQ	EYE,ELECTRIC,10-30VDC
9	1	1335MF-500	CONTROL BOX ASSY	43	1	K-4D	HD T LEG ADJ STAND
NS	AR	1335MF-PD	PNEUMATIC DIAGRAM	44	1	K-CB600	MOTOR STARTER,ELEC
NS	AR	1335MF-WD	WIRING DIAGRAM	45	1	MM9540K61	BUMPER,RUBBER 1" DIA
12	2	1975-412A	PLATE,NUT,4-40,.95CTC	46	12	NNH5/16-18	5/16-18 HEX NUT
13	1	4059-DC50	MOTOR,L/S,HIGH TORQ	47	1	NNHM4X0.7	NUT,HEX,M4-0.7
NS	1	4080-4508B	CABLE,STEP MOTOR,4AMP,7'	48	6	NNM103	NUT,RECESSED,5/16-18
15	6	1335244	ROD THRD,5/16-18 X 8.75	49	1	NNW1/4-20	NUT, WING, 1/4-20
16	1	1335274	WASHER PLATE	50	2	SSBC90020	8-32X3/8 BUTTON CAP
17	1	1335275	TOP PLATE- PANEL TENSION	51	1	SSBK01160	BOLT, CRGE, 1/4-20X2-1/2
18	1	1335278	PANEL TENSION FINGER	52	2	SSFS90048	#8-32 X 3/4 FLAT SLOT
19	1	1335280	NUT PLATE - PANEL TENSION	53	2	SSFS90048	#8-32 X 3/4 FLAT SLOT
20	1	1335281	NUT PLATE - PANEL TENSION	54	1	SSHC01040	1/4-20 X 5/8 HHCS
21	1	1335284	EDGE GUIDE	55	1	SSHC01160	1/4-20 X 2-1/2 HHCS
22	1	1335301	TABLE TOP,MAIN,W/SUPPORT	56	4	SSHC95032	SCREW, HEX CAP
23	1	1335302	LOWER TABLE SUPPORT	57	6	SSHC95064	SCREW, HEX CAP
24	1	1335716	PNEUMATIC, SHELF	58	3	SSSC01048	1/4-20 X 3/4" SOC CAP SC
25	1	1335774	BRACKET, TABLE MOUNT	59	1	SSSC95064	10-24 X1, SOC CAP
26	1	1335784	BRKT,ANGLE,CONTROL BOX	60	2	SSSCM3X30	SCREW,SOCKET CAP,M3 X 30MM
27	1	1335785	SPACER BLOCK	61	1	SSSCM4X40	SCREW,SOC CAP,M4-0.7X40
28	1	1335786	SPACER HOLDER	62	7	SSZS93032	SCREW, SHT.METAL 10 ZIP
29	1	1335936	BRKT,MNT,STEP BOX	63	12	WWFE020	WASHER,FENDER,5/16
30	2	AA198RA510	FLOW CONTROL,5/32X10-32	64	6	WWFS1/4	WASHER,FLAT,SAE,1/4
31	1	AACNCQ2B16-10D	COMPACT, 16MM BORE	65	15	WWFS10	WASHER, FLAT, #10, SAE
32	9	AAF3/16	CLAMP, BLACK PLASTIC	66	3	WWL1/4	WASHER,LOCK,1/4
33	2	AAQUY-4-4	Y UNION, 1/4X1/4	67	6	WWL5/16	WASHER, LOCK, 5/16
34	1	AAQUY-5-4	Y UNION, 5/32X1/4				

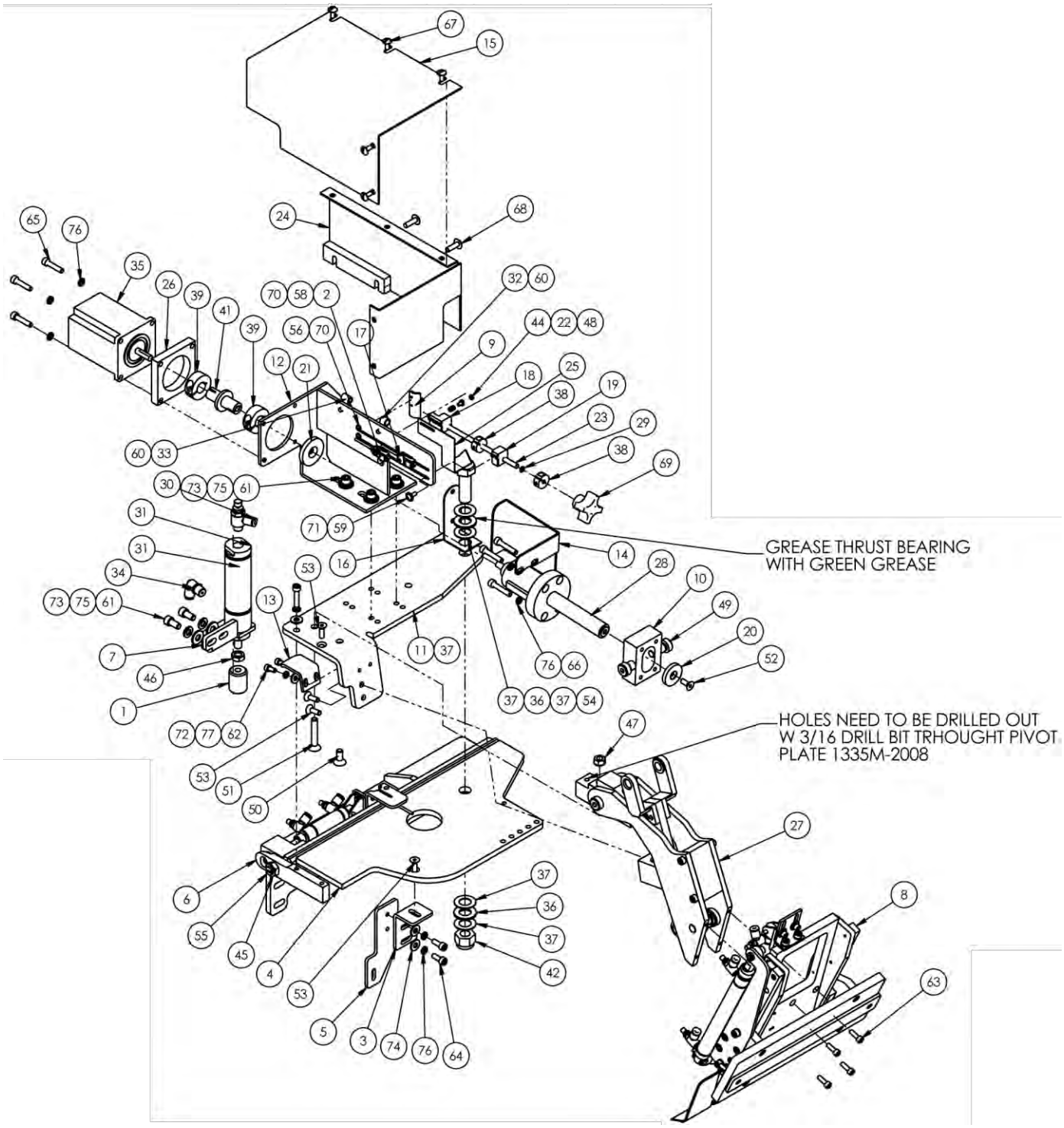
GREASE THRUST BEARING
WITH GREEN GREASE
HOLES NEED TO BE DRILLED OUT
W 3/16 DRILL BIT TRHOUGHT PIVOT
PLATE 1335M-2008

1335294 Ruffler Assembly

AAC Drawing Number 1335294 Rev10

NO.	QTY	PART #	DESCRIPTION	NO.	QTY	PART #	DESCRIPTION
1	1	11200A	BUMPER 5/16-24	40	11*	MM130-10A1	TAPE, UHMW, 1" W X .01 TK
2	2	1278-7055D	PROX SWITCH W/PLUG,12"	41	1	MM8FM	JOINT,UNIVERSAL,MOD
3	1	1335218	ADJ ANGLE-RUFFLER SUPP	42	1	NNE1/2-13	NUT, ELASTIC 1/2-13
4	1	1335298	RUFFLER MNT ASSY,MG2002P	43	1	NNH10-32	#10-32 HEX NUT
5	1	1335323	SUPPORT BRKT-RUFFLER	44	1	NNH2-56	#2-56 HEX NUT
6	1	1335324	LOCKING LEVER	45	1	NNJ3/8-16	3/8-16 HEX JAM NUT
7	1	1335328	FOOT LIFT BRKT	46	1	NNJ5/16-24	NUT,JAM,5/16-24
8	1	1335332	RUFFLER CYL LIFT ASSY	47	1	NNK1/4-20	KEP NUT, 1/4-20
9	1	1335M-001	BRACKET, STOP, PRX SWITCH	48	1	RRLC026B1	SPRING,COMP .026X.18X.25
10	1	1335M-2006	BLOCK, NUT TRUNION	49	2	SSAS024024M	3/8 X 3/4 X 5/16-18
11	1	1335M-2008	PIVOT PLATE	50	1	SSFC01040	1/4-20 X 5/8 FLAT ALLEN
12	1	1335M-2016	Motor BRKT	51	1	SSFC01096	1/4-20 X 1-1/2 FLAT ALLEN
13	1	1335M-2020	HLD DWN BRKT	52	1	SSFC98032	#10-32 X 1/2 FLAT ALLEN
14	1	1335M-2021	VANE, SWITCH ACTUATING	53	4	SSFC98040	#10-32 X 5/8 FLAT ALLEN
15	1	1335M-2030	MOTOR COVER, CLEAR	54	1	SSHC45096	1/2-13 X 1 1/2 L HHCS
16	1	1335M-2031	PIVOT BRKT AIR LINE	55	1	SSMB58N	PLUNGER,BALL,3/8-16X5/8L
17	1	1335M-2034	PLATE, NUT #2-56	56	2	SSPS50020	#2-56 X 5/16 PAN HD SLOT
18	1	1335M-2035	ADJUSTMENT NUT, 10-32	57	1	SSPS50032	#2-56 X 1/2 PAN HD SLOT
19	1	1335M-2036	SUPPORT BLOCK	58	1	SSPS50048	#2-56 X 3/4 PAN HD SLOT
20	1	1335M-2037	WASHER, STOP	59	1	SSPS80024	#6-32 X 3/8 LG PAN HD
21	1	1335M-2038	STOP WASHER	60	2	SSPS90024	#8-32 X 3/8 LG PAN HD
22	1	1335M-2039	NUT,SPRING RETAINER	61	6	SSSC01032	1/4-20X1/2 SOC CAP
23	1	1335M-2040	SCREW, ADJUSTMENT	62	2	SSSC90024	#8-32 X 3/8 SOC CAP
24	1	1335M-2042	COVER	63	4	SSSC90032	#8-32 X 1/2 SOC CAP
25	1	1335M-2047	POINTER, RUFFLE SIZE	64	2	SSSC98032	#10-32 X 1/2 SOC CAP
26	1	1335M-2049	SPACER, MOTOR, 3/8	65	5	SSSC98056	#10-32 X 7/8 SOC CAP
27	1	1335M-2300B	PIVOT ASSY	66	4	SSSC98064	#10-32 X 1 SOC CAP
28	1	1335M-2400	BALL SCREW AND NUT	67	5	SSTS90024	#8-32 X 3/8 TRUSS HD
29	1	AA198-7006	O RING, 1/8 ID, 1/4 OD	68	2	SSTS98040	#10-32 X 5/8 TRUSS HD
30	1	AA198RR508	FLOW CONTROL,5/32 X 1/8"	69	1	TTCL1APPK1	PLASTIC KNOB, #10-32
31	1	AAC6D-1.5	CYL, AIR, DA 1-1/16 B,1.5 S	70	4	WWF2	WASHER, FLAT #2
32	1	AAF1_8	CLAMP,PLASTIC 1/8	71	1	WWF6	DO NOT USE - SEE WWFS6
33	1	AAF3/16	CLAMP, BLACK PLASTIC	72	2	WWF8	WASHER, FLAT #8
34	1	AAQME-5-8	QUICK MALE ELBOW	73	6	WWFS1/4	WASHER FLAT, 1/4
35	1	AP-22E-103	STEP MOTOR,MODIFIED	74	4	WWFS10	WASHER, FLAT #10
36	2	BBNTA815	BEARING,THRUST,1/2BORE	75	6	WWL1/4	1/4 LW
37	4	BBTRA815	WASHER,THRUST,STEEL 1/2	76	12	WWL10	#10 LW
38	2	CCCL10T	CLAMP COLLAR TRD, 10-32	77	2	WWL8	#8 LW
39	2	CCCL8F	CLAMP COLLAR- 1/2				

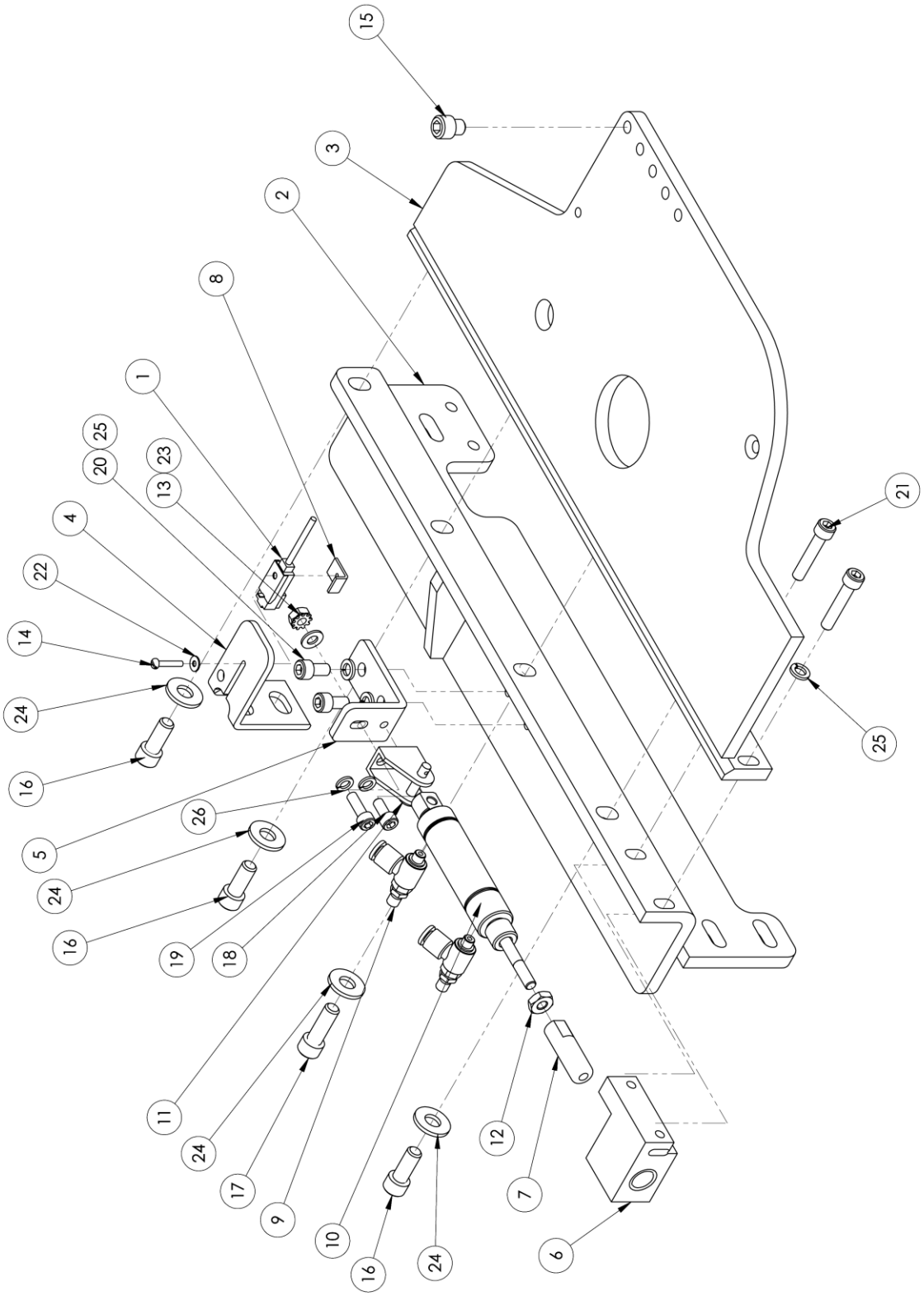
15
3
2
8
1
25
20
23
13
4
22
14
24
16
5
24
16
26
19
18
11
24
17
9
10
16
24
12
7
6
21
25

1335298 Ruffler Mount Assembly, MG2002P

AAC Drawing Number 1335298 Rev4

ITEM	QTY	PART #	DESCRIPTION
1	1	1278-7055D	PROX SWITCH W/PLUG,12"
2	1	1335314	RUFFLER MTG BRKT WELDT
3	1	1335315	BASE PLATE, RUFFLER MTG
4	1	1335325	MTG. BRKT. SENSOR
5	1	1335330	MTG. BRKT. LOCK PIN CYL.
6	1	1335334	CYL. MOUNT
7	1	1335M-2017	ROD, END
8	1	1335M-2034	PLATE, NUT #2-56
9	2	AA198RA510	REV FL CONT,5/32X10-32
10	1	AAC8DP-.5	CYL,AIR,DA,9/16 B,1/2S
11	1	AAFBP-8C	BRKT,PIVOT,5/32 BORE
12	1	NNH10-32	#10-32 HEX NUT
13	1	NNK8-32	NUT,KEP,8-32
14	1	SSPS50032	#2-56 X 1/2 PAN HD SLOT
15	1	SSSC01016S	1/4-20 X 1/4 SOC CAP SC
16	3	SSSC01040	1/4-20 X 5/8 SOC CAP
17	1	SSSC01048	1/4-20 X 3/4 SOC CAP
18	1	SSSC90024	#8-32 X 3/8 SOC CAP SC
19	1	SSSC90032	#8-32 X 1/2 SOC CAP SC
20	2	SSSC98024	#10-32 X 3/8 SOC CAP
21	2	SSSC98064	#10-32 X 1 SOC CAP
22	1	WWF2	WASHER, FLAT #2
23	1	WWF8	WASHER, FLAT, #8
24	4	WWFS1/4	WASHER FLAT, 1/4
25	4	WWL10	#10 LW
26	2	WWL8	#8 LW

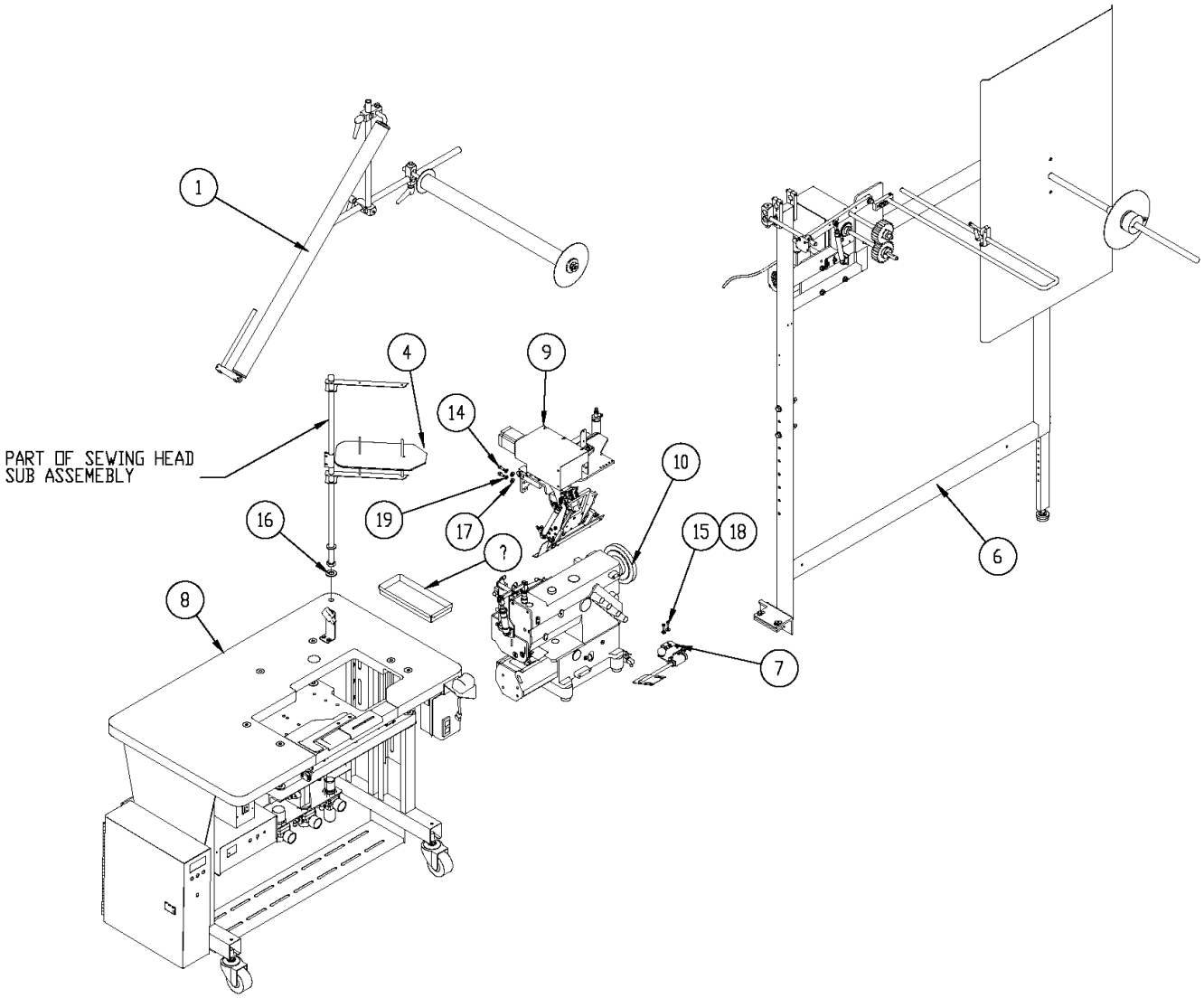
1
4
9
14
PART OF SEWING HEAD
SUB ASSEMEBLY
10
16
19
17
?
15
18
8
6
7

1335307 Ruffler Main Assembly

AAC Drawing Number 1335307 Rev7

NO.	QTY	PART#	DESCRIPTION
1	1	1335M-430E	GUIDE ROLLER ASSY
NS	AR	1335M-LAB	LABELS 11335MG
NS	AR	1335MF-PD	DIAGRAM, PNEUMATIC
4	1	1959-112	2 POS THREAD PLATE ASSY
5	1	26151	TOOL TRAY, 1X3.5X9
6	1	1335105	UNWINDER ASSY (K3)
7	1	1335181	STRIPPER BLADE ASY,1335MG
8	1	1335293	STAND / MOTOR ASSY- MG200
9	1	1335294	RUFFLER ASSEMBLY
10	1	1335427	SEW HEAD ASSY,1335MG
NS	6	SSSC01032	1/4-20 X 1/2 SOC CAP
NS	4	SSSC01040	1/4-20 X 5/8 SOC CAP
NS	2	SSSC01048	1/4-20 X 3/4 SOC CAP
14	2	SSSC05040	1/4-28 X 5/8 SOC CAP
15	2	SSSC95040	10-24 X1, SOC CAP
16	1	WWF5/8	WASHER, FLAT, 5/8
17	9 *	WWFS1/4	WASHER FLAT, 1/4
18	2	WWFS10	WASHER, FLAT #10
19	11 *	WWL1/4	1/4 LW
NS	1	ZX3833	V BELT, 3/8 X 33"

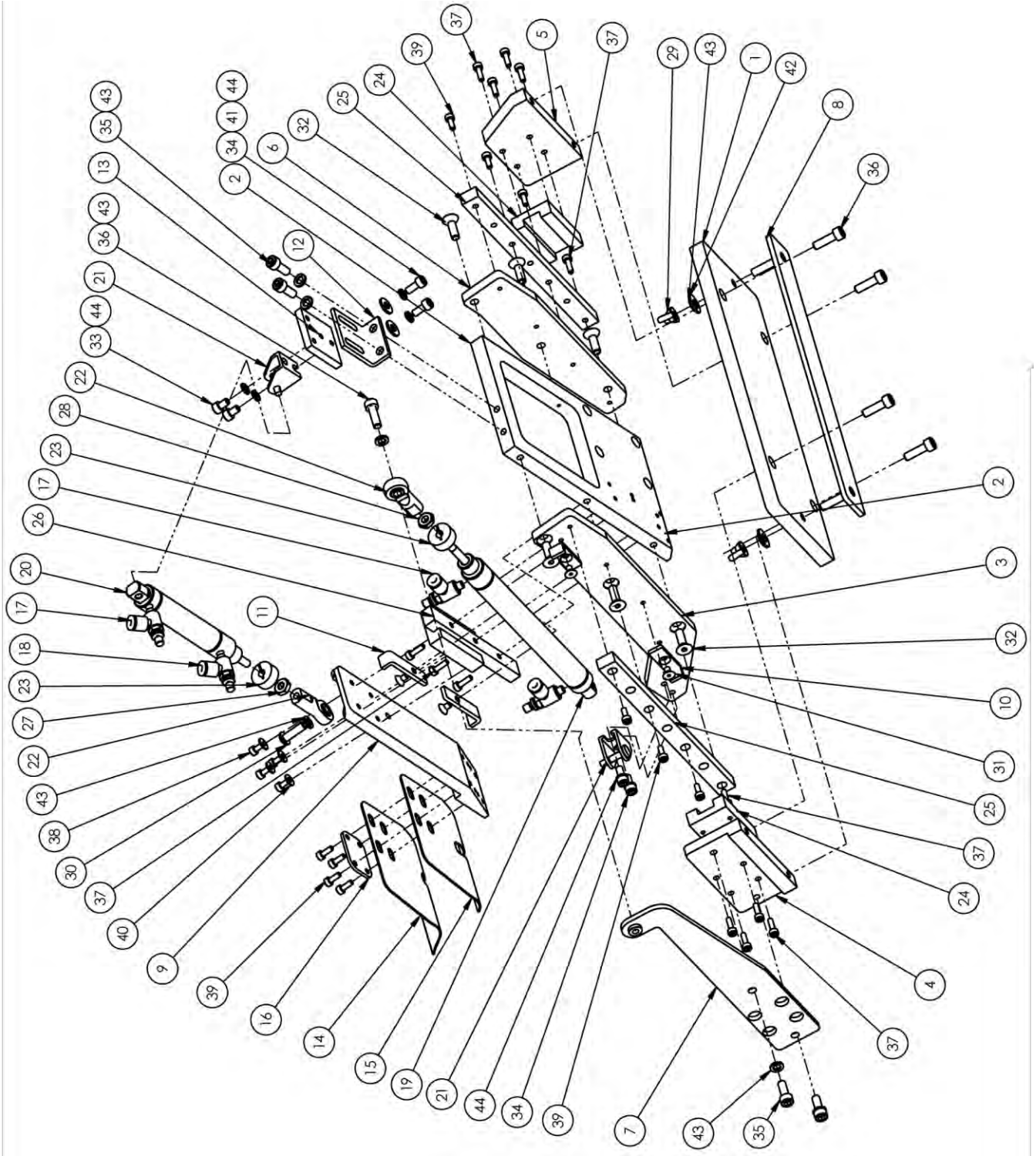

1335332 Ruffler Cylinder Lift Assembly

AAC Drawing Number 1335332 Rev8

NO.	QTY	PART #	DESCRIPTION
1	1	1335223	BASE MTG PLT, FOLDER
2	1	1335224	BASE MTG PLATE
3	1	1335226	MTG PLT LH- RAIL
4	1	1335227	SUPPORT-SLIDE, LH SIDE
5	1	1335228	SUPPORT, RH
6	1	1335229	MTG PLT RH- RAIL
7	1	1335230	FOLDER SLIDE ARM
8	1	1335235	STUD PLATE-YAMATO1804
9	1	1335335	MTG PLT- HEAVY DUTY
10	2	1335338	BRG STOP
11	2	1335775	BEARING STOP, LONG
12	1	1335776	CYL. MOUNTING ANGLE
13	1	1335777	CYL. MOUNTING PLATE
14	1	1335M-2002E	BLADE, RUFFLER, 2.25 X 12
15	1	1335M-2002F	BLADE, RUFFLER, 2.25 X 12
16	1	1335M-5004	PLATE, WASHER, 136DIA@4PL
17	3	AA198RA510	FLOW CONTROL,5/32X10-32
18	1	AA198RR510	REV FL CONT,5/32X10-32
19	1	AAC024DXP	CYL,BIMBA,9/16 B,4 S
20	1	AAC8DP-1.5	CYL, AIR, DA, 9/16B, 2S
21	2	AAFBP-8C	BRKT,PIVOT,5/32 BORE
22	2	BBAW-3Z	BRG,ROD END,F, 10-32
23	2	CCCL3F	CLAMP COLLAR- 3/16
24	3	MMGN12HZ0HN	MGN12H BEARING BLOCK
25	2	MMGNR12R0165HN	165MM RAIL - MGN12H BLK
26	1	MMGNR12R090HN	12MM X 90MM RAIL
27	1	NNH10-32	#10-32 HEX NUT
28	1	NNJ10-32	NUT,JAM,THIN #10-32
29	2	NNW10-32	#10-32 WING NUT
30	1	SSBC98040	#10-32 X 5/8 BUT HEAD
31	4	SSFC80016	#6-32 X 1/4 FLAT ALLEN
32	6	SSFC98040	#10-32 X 5/8 FLAT ALLEN
33	2	SSSC90016	#8-32 X 1/4 SOC CAP
34	4	SSSC90024	#8-32 X 3/8 SOC CAP
35	4	SSSC98032	#10-32 X 1/2 SOC CAP
36	5	SSSC98040	#10-32 X 5/8 SOC CAP
37	13	SSSCM3X10	M3-0.5 X 10 SOC CAP
38	4	SSSCM3X6	M3-0.5 X 6 SOC CAP
39	10	SSSCM3X8	M3-0.5 X 8 SOC CAP
40	4	WWF4	WASHER, FLAT #4
41	2	WWF8	WASHER, FLAT #8
42	2	WWFS10	WASHER, FLAT #10
43	8	WWL10	#10 LW
44	6	WWL8	#8 LW

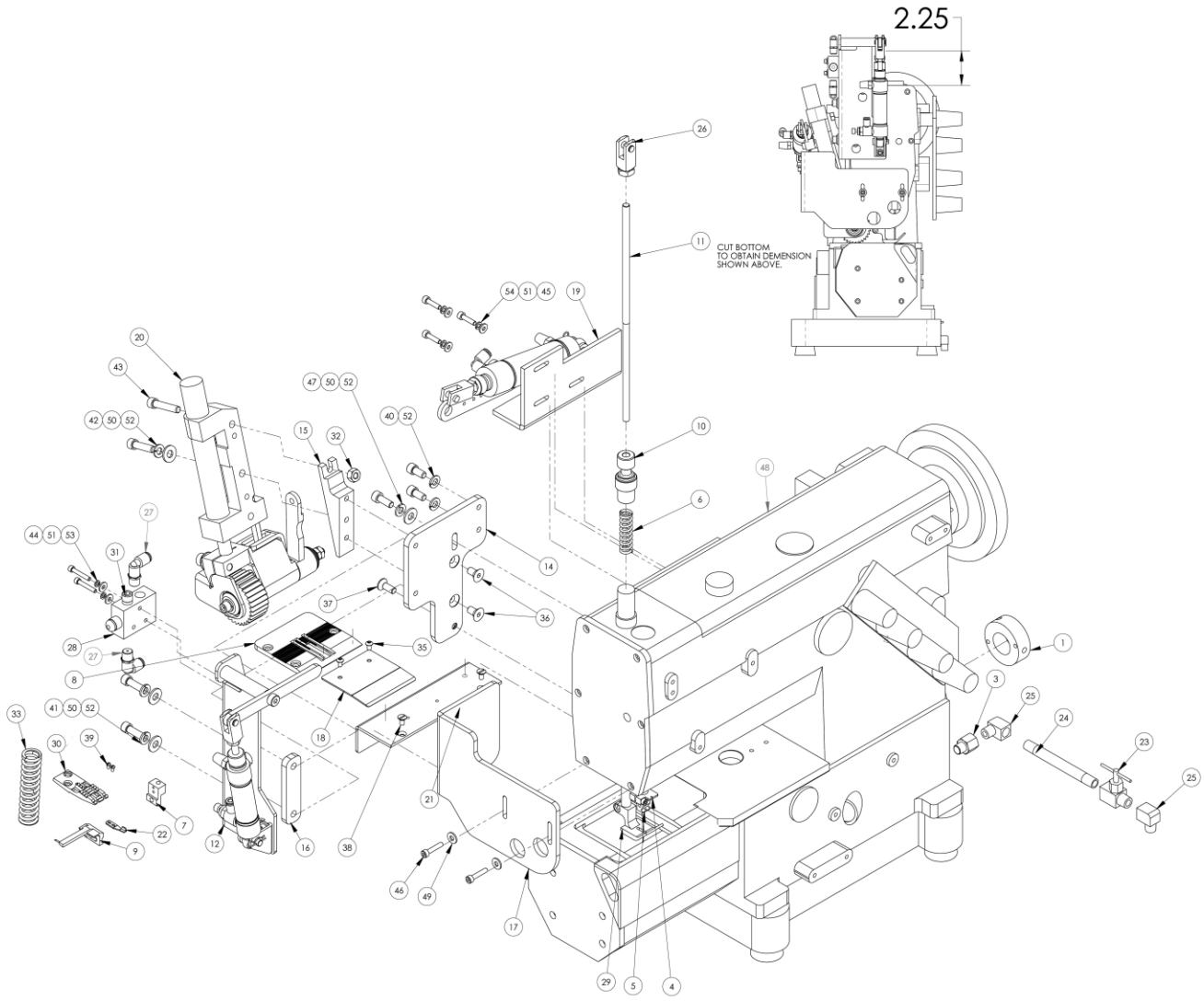
2.25
CUT BOTTOM
TO OBTAIN DEMENSION
SHOWN ABOVE.

1335427 Sew Head Assembly

AAC Drawing Number 1335427 Rev7

ITEM	QTY	PART #	DESCRIPTION	ITEM	QTY	PART #	DESCRIPTION
1	1	1278-6364	DISC, TAPE MOUNTING	28	1	AAV41-P	HUMPHREY VALVE,4 WAY
2	*1	1325-013	THREAD GUIDE,MOD.	29	1	M1Y88-003	FOOT, SN, 1335MG
3	1	1335-109	ADAPTER,DRAIN PLUG	30	1	M2Y88-002	FEED DOG,1N,HEAVY DUTY
4	1	1825N10S01	THREAD GUIDE	31	1	MM4554K11	PLUG, 1/8" PIPE
5	1	1825N14S01	NEEDLE CHUCK,1N	32	1	NNH3/8-16	1/4-20 HEX NUT
6	1	65372	SPRING,PRESSER BAR	33	1	RRLC105J10	SPRING,COMP .105X.75X3.0
7	1	268602	LOOPER HOLDER, 1NDL	NS	AR	SN62X5924	NEEDLE, SIZE 180/24
8	1	268614M	PLATE,THROAT,1N	35	2	SSBC80016	#6-32 X 1/4 BUT HEAD
9	1	281975	SPREADER BAR 1N	36	2	SSFC01032	1/4-20 X 1/2 FLAT ALLEN
10	1	1335208	FOOT LIFT ADJ - MOD	37	1	SSFCM6X16	M6-1.0 X 16 FLAT ALLEN
11	1	1335209	FOOT LIFT PIN	38	2	SSFSM4X8	M4-0.70 X 8 FLAT SLOT
12	1	1335271	FOOT PRESSURE ASSY	39	2	SSM200172	SCREW,3/32-48X5/32
13	1	1335308	SEWHEAD PLATE, MOD	40	2	SSSC01032	1/4-20 X 1/2 SOC CAP
14	1	1335311	RUFFLER MTG BRKT-YA-1804	41	2	SSSC01048	1/4-20 X 3/4 SOC CAP
15	1	1335312	BRKT, PULLER MOUNT, YAM	42	1	SSSC01064	1/4-20 X 1 SOC CAP
16	1	1335313	RUFFLER MTG BRKT-SPACER	43	1	SSSC01080	1/4-20 X 1-1/4 SOC CAP
17	1	1335417	PULLER GUARD-HD	44	2	SSSC80056	#6-32 X 7/8 SOC CAP
18	1	1335418	PULLER WEAR PLATE	45	3	SSSCM4X16	M4-0.7 X 16 SOC CAP
19	1	1335426	PULLER LIFT ASSY-1804P	46	2	SSSCM4X20	M4-0.7 X 20 SOC CAP
20	1	1335428	PULLER MOD, YAMATO 1804	47	1	SSSCM6X16	M6-1.0 X 16 SOC CAP
21	1	1335431	PLATE, SPACER, HD	48	1	SYAM-	SEWING
22	1	4209200M	LOOP GUARD,MODIFIED	49	2	WWF8	WASHER, FLAT #8
23	1	AAF2305-2	NEEDLE VALVE 1/8 NPT	50	4	WWFS1/4	WASHER FLAT, 1/4
24	1	AAF4568K116	NIPPLE,1/4NPT X 3.5L	51	5	WWFS6	WASHER, FLAT, #6
25	2	AAF23400-2	"L",BRASS,1/8 FM - 1/8 M	52	6	WWL1/4	1/4 LW
26	1	AAFCT-7	HUMPHREY CLEVIS	53	2	WWL6	WASHER,LOCK,6
27	2	AAQME-5-8	QUICK MALE ELBOW	54	3	WWL8	#8 LW

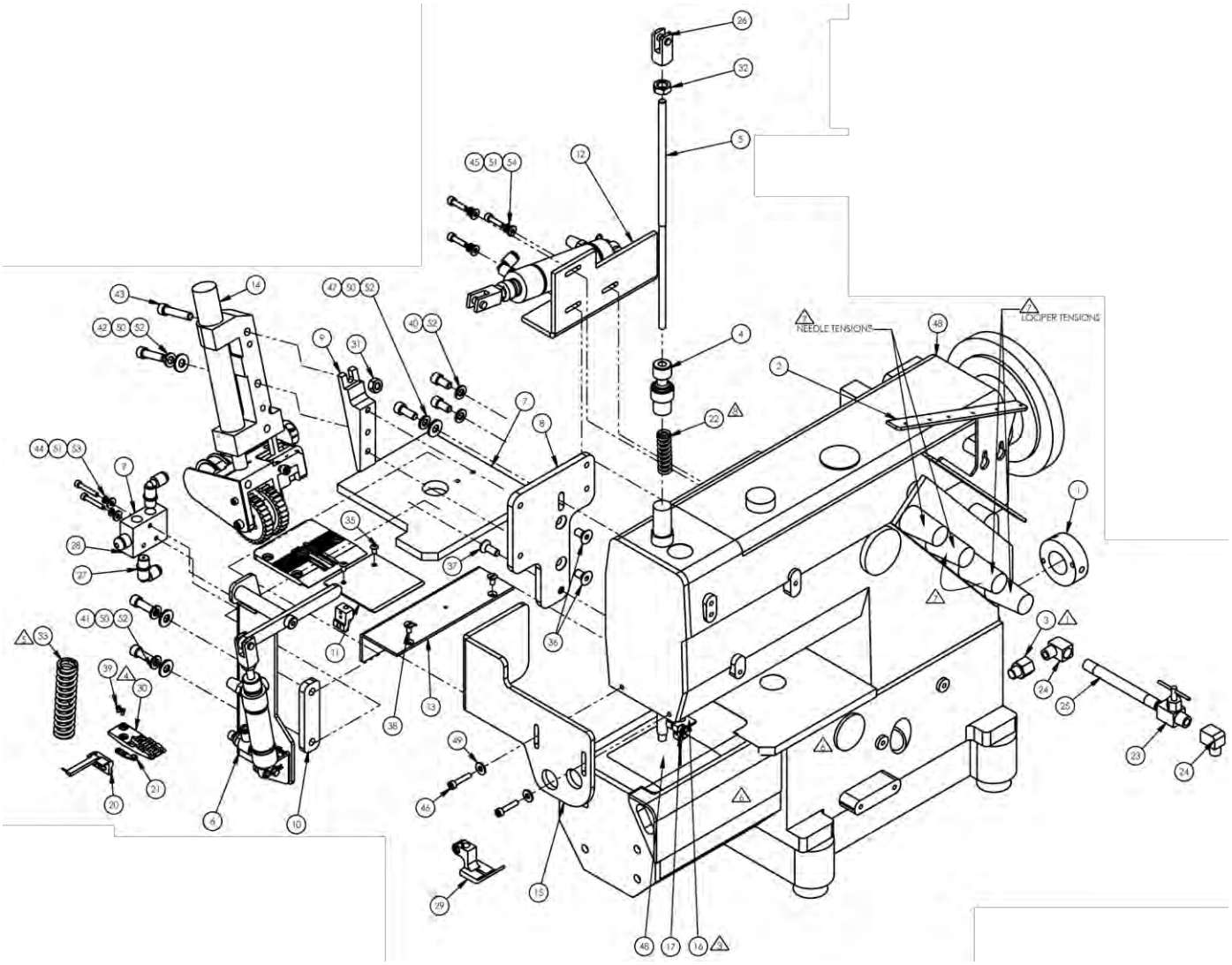
NEEDLE TENSIONS
LOOPER TENSIONS

1335762 Sew Head Assembly

AAC Drawing Number 1335762 Rev3

NO.	QTY	PART #	DESCRIPTION	NO.	QTY	PART #	DESCRIPTION
1	1	1278-6364	DISC, TAPE MOUNTING	28	1	AAV41-P	HUMPHREY VALVE,4 WAY
2	1	1325-013	THREAD GUIDE,MODIFIED	29	1	M1Y88-003	FOOT, SN, 1335MG
3	1	1335-109	ADAPTER,DRAIN PLUG	30	1	M2Y88-002	FEED DOG,1N,HEAVY DUTY
4	1	1335208	FOOT LIFT ADJ - MOD	31	1	NNH1/4-20	1/4-20 HEX NUT
5	1	1335209	FOOT LIFT PIN	32	1	NNJ3/8-16	3/8-16 HEX JAM NUT
6	1	1335271	FOOT PRESSURE ASSY	33	1	RRLC105J10	SPRING,COMP .105X.75X3.0
7	1	1335308	SEWHEAD PLATE, MOD	NS	AR	SN62X5924	NEEDLE, SIZE 180/24
8	1	1335311	RUFFLER MTG BRKT-YA-1804	35	2	SSBC80016	#6-32 X 1/4 BUT HEAD
9	1	1335312	BRKT, PULLER MOUNT, YAM	36	2	SSFC01032	1/4-20 X 1/2 FLAT ALLEN
10	1	1335313	RUFFLER MTG BRKT-SPACER	37	1	SSFCM6X16	M6-1.0 X 16 FLAT ALLEN
11	1	1335418	PULLER WEAR PLATE	38	2	SSFSM4X8	M4-0.70 X 8 FLAT SLOT
12	1	1335426	PULLER LIFT ASSY-1804P	39	2	SSM200172	SCREW,3/32-48X5/32
13	1	1335431	PLATE, SPACER, HD	40	2	SSSC01032	1/4-20 X 1/2 SOC CAP
14	1	1335750	PULLER ASSY, INTERMIT.,HD	41	2	SSSC01048	1/4-20 X 3/4 SOC CAP
15	1	1335763	PULLER GUARD-HD	42	1	SSSC01064	1/4-20 X 1 SOC CAP
16	1	1825N10S01	THREAD GUIDE	43	1	SSSC01080	1/4-20 X 1-1/4 SOC CAP
17	1	1825N14S01	NEEDLE CHUCK,1N	44	2	SSSC80056	#6-32 X 7/8 SOC CAP
18	1	268602	LOOPER HOLDER, 1NDL	45	3	SSSCM4X16	M4-0.7 X 16 SOC CAP
19	1	268614M	PLATE,THROAT,1N	46	2	SSSCM4X20	M4-0.7 X 20 SOC CAP
20	1	281975	SPREADER BAR 1N	47	1	SSSCM6X16	M6-1.0 X 16 SOC CAP
21	1	4209200M	LOOP GUARD,MODIFIED	48	1	SYAM-MG2002P	SEWING HEAD,YAMATO,2N,NF
22	1	65372	SPRING,PRESSER BAR	49	2	WWF8	WASHER, FLAT #8
23	1	AAF2305-2	NEEDLE VALVE 1/8 NPT	50	4	WWFS1/4	WASHER FLAT, 1/4
24	2	AAF23400-2	"L",BRASS,1/8 FM - 1/8 M	51	5	WWFS6	WASHER, FLAT, #6
25	1	AAF4568K116	NIPPLE,1/4NPT X 3.5L	52	6	WWL1/4	1/4 LW
26	1	AAFCT-7	CLEVIS,AIR CYL, 1/4-28	53	2	WWL6	WASHER,LOCK,6
27	2	AAQME-5-8	QUICK MALE ELBOW	54	3	WWL8	#8 LW

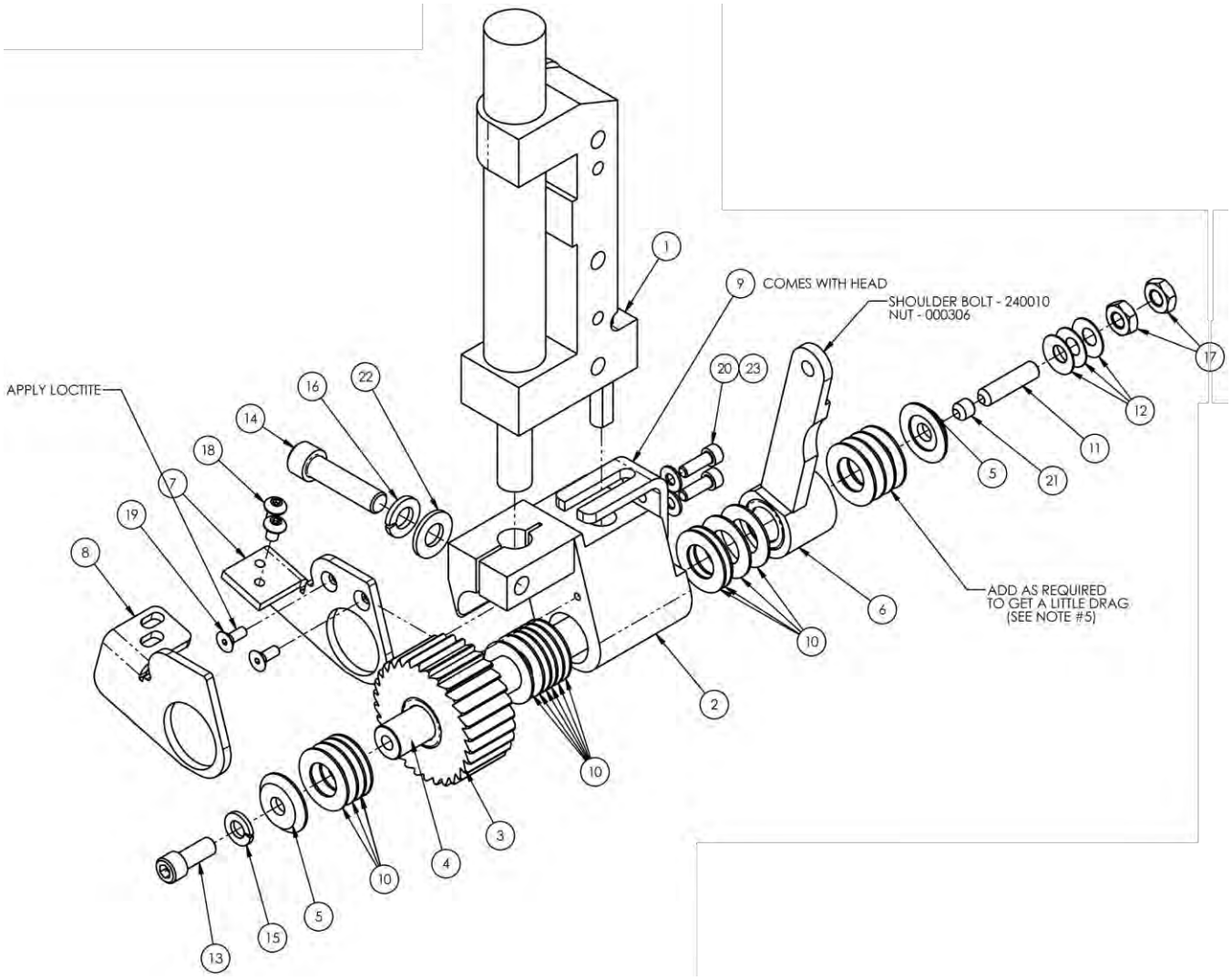
APPLY LOCTITE
9 COMES WITH HEAD
SHOULDER BOLT - 240010
NUT - 000306
ADD AS REQUIRED
TO GET A LITTLE DRAG
(SEE NOTE #5)
1
2
3
4
5
6
7
8
10
11
12
13
14
15
16
17
18
19
20
21
22
23

1335428 Puller Modification, Yamato 1804

AAC Drawing Number 1335428 Rev8

NO.	QTY	PART #	DESCRIPTION
1	1	1335394	PULLER,MOD,MG2002/VM1804
2	1	1335395	YOKE, PULLER-HD
3	1	1335397	PULLER ROLLER, HD, 2002MG
4	1	1335399	SHAFT, PULLER, HD
5	2	1335400	WASHER, HUB CAP, 1/4
6	1	1335414	DRIVE ARM, PULLER,HD
7	1	1335928	STRIPPER PLATE
8	1	1335929	STRIPPER PLATE
9	1	3100612	UPPER FEED ROLLER YOKE GU
10	18	BBTRA815	WASHER,THRUST,STEEL 1/2
11	1	SSSS05064	SET SCREW1/4-28X1
12	3	WWS307-1	WASHER,SPRING,BELVEL
13	1	SSSC05040	1/4-28 X 5/8 SOC CAP
14	1	SSSC20080	5/16-24 X 1-1/4 SOC CAP
15	1	WWL1/4	1/4 LW
16	1	WWL5/16	5/16 LW
17	2	NNJ1/4-28	1/4-28 HEX JAM NUT
18	2	SSBC90016	#8-32 X 1/4 BUT HEAD
19	2	SSFC80024	#6-32 X 3/8 FLAT ALLEN
20	2	SSSC90032	#8-32 X 1/2 SOC CAP
21	1	SSSS05016	1/4-28 X 1/4 KNURL PT
22	1	WWFS5/16	WASHER, FLAT, 5/16
23	2	WWB5/32	WASHER, FLAT, 5/32", BRAS

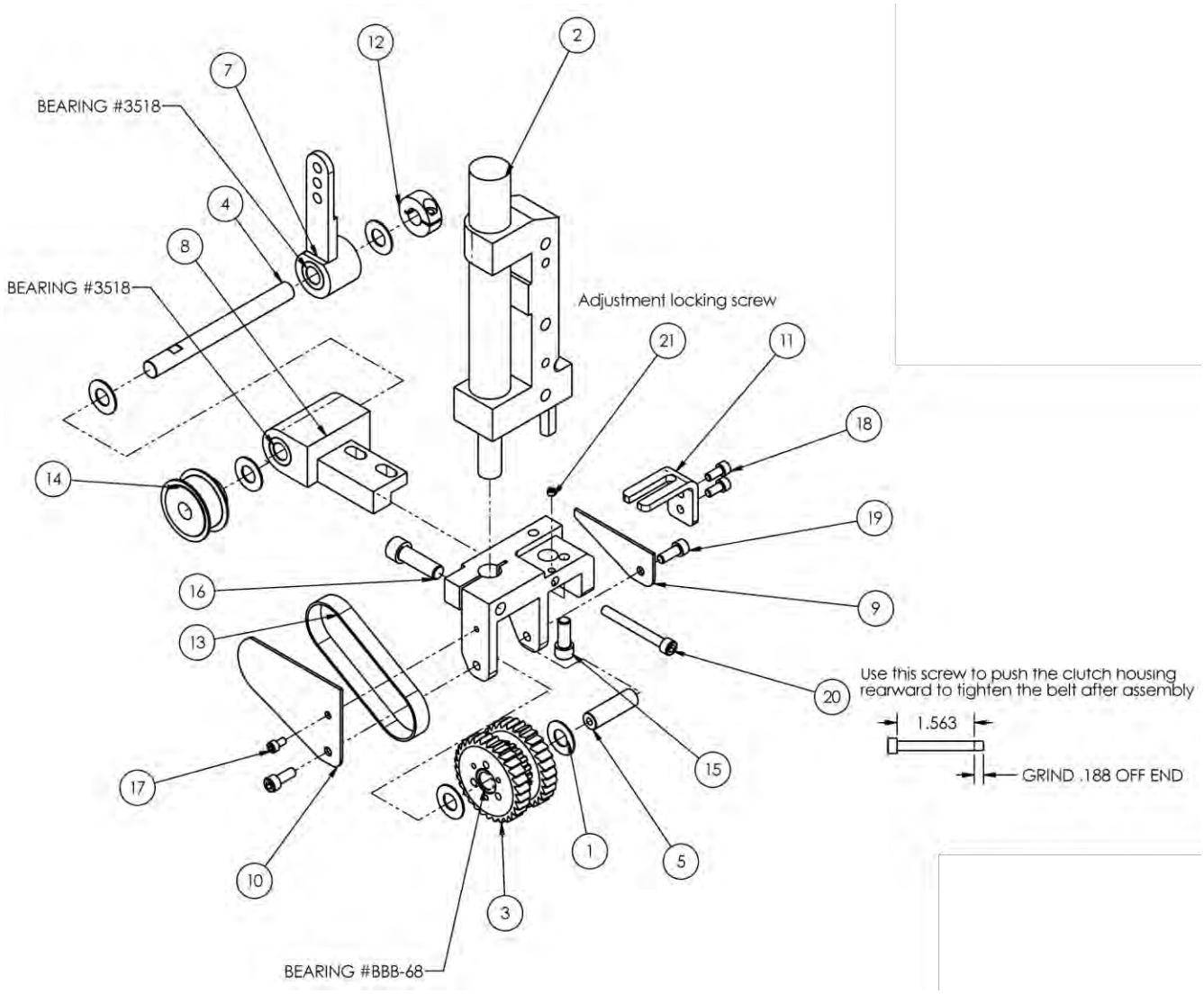
12
2
7
BEARING #3518
4
8
BEARING #3518
Adjustment locking screw
21
11
18
14
19
16
9
13
20
Use this screw to push the clutch housing rearward to tighten the belt after assembly
1.563
GRIND .188 OFF END
15
17
1
5
10
3
BEARING #BBB-68

1335750 Puller Assembly, Intermit. HD

AAC Drawing Number 1335750 Rev3

NO.	QTY	PART #	DESCRIPTION
1	5	3517	WASHER,THRUST,BRONZE
2	1	1335394	PULLER,MOD,MG2002/VM1804
3	1	1335743	PULLER ROLLER ASSEMBLY
4	1	1335747	SHAFT, PULLER, HD
5	1	1335748	SHAFT, PULLER, IDLER
6	1	1335749	YOKE, PULLER-HD
7	1	1335751	DRIVE ARM, PULLER,HD
8	1	1335754	CLUTCH HOUSING, PULLER
9	1	1335756	GUARD, RIGHT
10	1	1335757	GUARD, LEFT SIDE
11	1	3100612	UPPER FEED ROLLER YOKE GU
12	1	CCCL6F	CLAMP COLLAR- 3/8
13	1	GG80XL037U	BELT,GEAR,1/5P,3/8W,8"L
14	1	PP18XL037M	PULLEY,GEAR,1/5P,18T,3/8B
15	2	SSSC05040	1/4-28 X 5/8 SOC CAP
16	1	SSSC20064	5/16-24 X 1 SOC CAP
17	1	SSSC85016	#6-40 X 1/4 SOC CAP
18	2	SSSC90024	#8-32 X 3/8 SOC CAP
19	2	SSSC98032	#10-32 X 1/2 SOC CAP
20	1	SSSC98112	#10-32 X 1-3/4 SOC CAP
21	1	SSSS90008	#8-32 X 1/8 KNURL PT

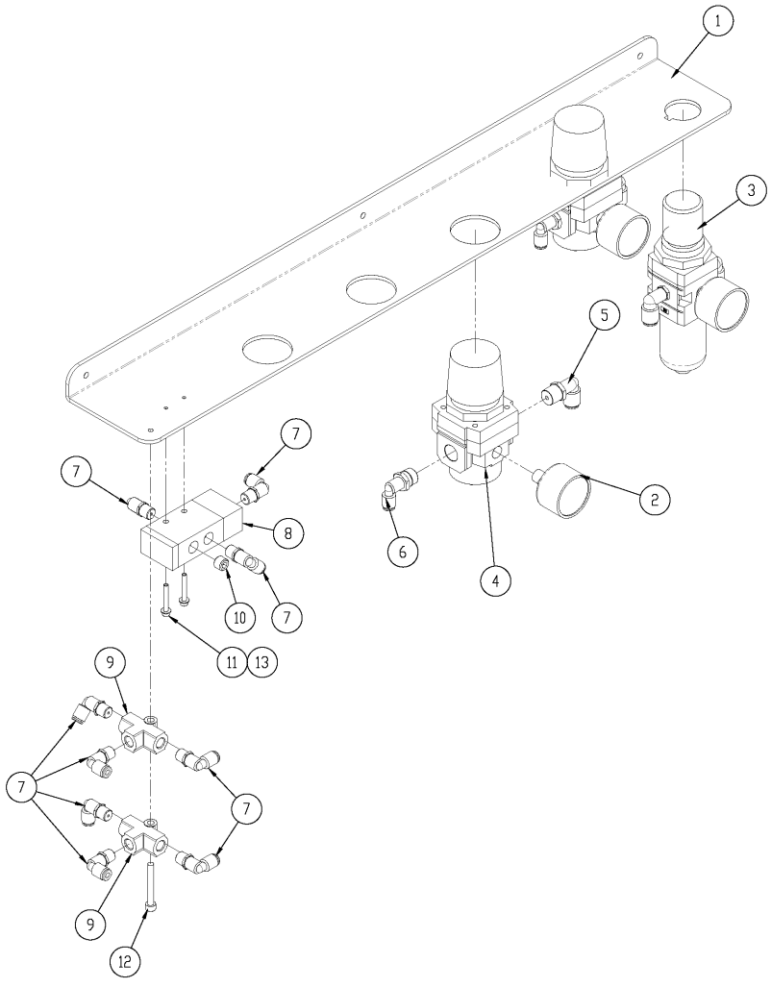

1335716 Pneumatic Shelf

AAC Drawing Number 1335716 Rev3

NO.	QTY	PART#	DESCRIPTION
1	1	1335715	BRACKET, PNEUMATIC
2	2	AA198-503	0-30PSI AIR GAGE 1/8NPT
3	1	AA198-5102	REGULATOR W/GAUGE & NUT
4	2	AA198-RP3	REGULATOR,PRECISION AIR
5	2	AAQME-4-4	ELBOW, MALE,1/4X1/4NPT
6	2	AAQME-5-4	ELBOW, MALE 5/32X1/4NPT
7	9	AAQME-5-8	QUICK MALE ELBOW
8	1	AAV125B	PILOT VALVE
9	2	AAVS125	SHUTTLE VALVE,1/8"PORT
10	1	MM4554K11	PLUG, 1/8" PIPE
11	2	SSSC80064	6-32 X 1 SOC CAP SC
12	1	SSSC98096	10-32 X 1-1/2 SOC CAP
13	2	WWFS6	WASHER, FLAT, #6

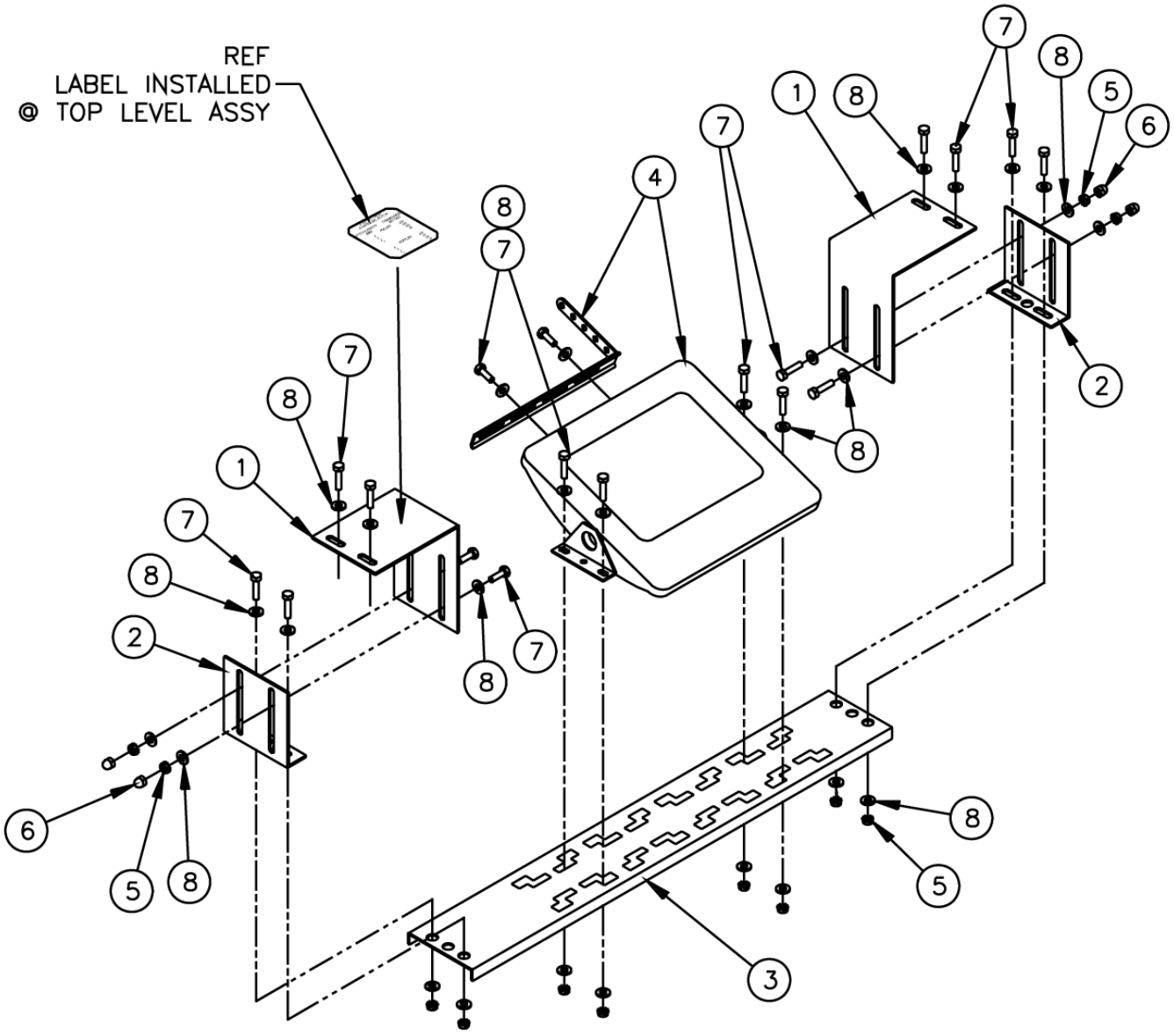

1335M-1005 Sit-Down Treadle Assembly

AAC Drawing Number 192857C Rev 1

NO.	QTY	PART #	DESCRIPTION
1	2	1335M-105	Treadle Brkt
2	2	160929A	Show Stand Brkt
3	1	K-100-30M	Treadle Brace
4	1	K-340	Threadle W/BRKT
5	12	NNK1/4-20	Kep Nut
6	4	NNC1/4-20	Cap Nut
7	18	SSHC01048	Screw, Hex Cap
8	30	WWFS1/4	Flat Washer

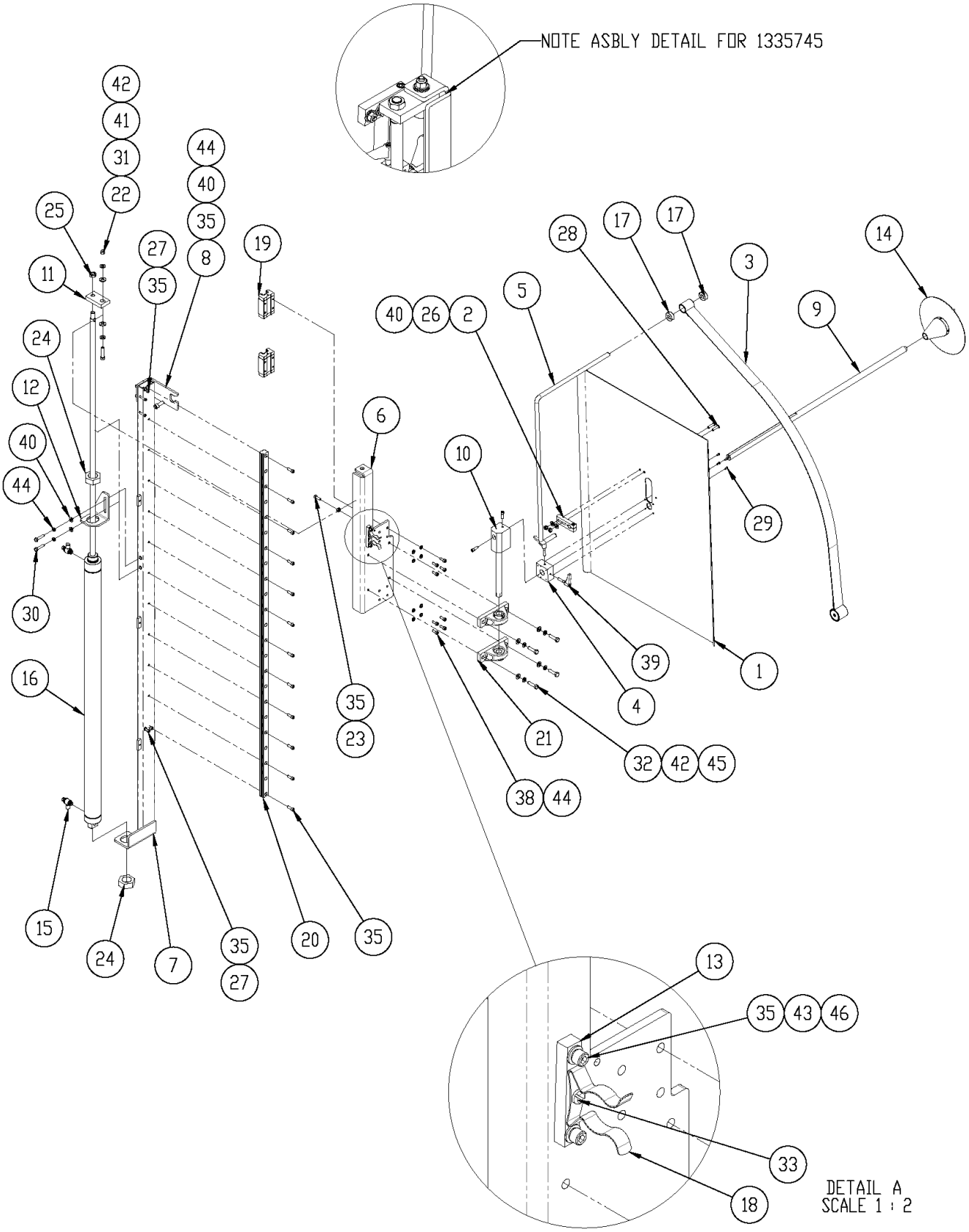
NOTE ASBLY DETAIL FOR 1335745
DETAIL A
SCALE 1 : 2

1335740 Roll Holder Assembly

AAC Drawing Number 1335740 Rev2

NO.	QTY	PART#	DESCRIPTION
1	1	784B-2436	PLATE, ALU, 23.75 X 31.75
2	1	1325-346	HOLDER,ROD,1/2 D,SLOT MNT
3	1	1335-825	DRAG TENSION ASSEMBLY
4	1	1961-253A	HUB, UNWIND STAND
5	1	1335179	ROD,BENT,CRS,1/2 OD
6	1	1335196	MOUNT, BEARING
7	1	1335197	FRAME, ROLL HOLDER
8	1	1335366	STOP, HOLDER UP
9	1	1335448	ROD, ROLL, 31.5" L
10	1	1335741	PIVOT, ROLL HOLDER
11	1	1335745	LINK, CYLINDER LIFT
12	1	1335758	MOUNT, CYLINDER UPPER
13	1	1335761	SPACER, ROD HOLDER
14	1	33008708	DISC ASSY,8"
15	2	AA198RA404U	FLOW CONTROL,1/4PTX1/4
16	1	AAC3136DXP	CYLINDER,AIR,2"BORE,36"ST
17	2	CCCL8F	CLAMP COLLAR- 1/2
18	1	MM1722A43	HOLDER, ROD
19	2	MMAGH25CAN	LINEAR BEARING
20	1	MMAGR251340N	RAIL,LINEAR, AG 1340MM
21	2	MMVPS-112	BEARING,PILLOW BLOCK 3/4B
22	1	NNE5/16-18	NUT,ELASTIC LOCK,5/16-18
23	1	NNH1/4-20	1/4-20 HEX NUT
24	2	NNJ1-1/4-12	NUT-HEX JAM 1-1/4-12
25	1	NNJ1/2-20	1/2-20 HEX JAM NUT
26	2	NNK1/4-20	KEP NUT, 1/4-20
27	2	NNK10-32	KEP NUT, 10-32
28	2	SSBC01064	1/4-20 X 1 BUT HEAD
29	4	SSBC80024	6-32 X 3/16 BUT HEAD
30	2	SSHC01080	1/4-20 X 1-1/4 HEX HEAD
31	1	SSHC10096	5/16-18 X 1-1/2 HEX HEAD
32	4	SSHC20080	5/16-24 X 1-1/4 HEX HEAD
33	1	SSPS98024	#10-32 X 3/8 LG. PAN HD SLOT
34	4	SSSC01032	1/4-20X1/2 SOC CAP
35	24	SSSC05048	1/4-28 X 3/4, SOC CAP
36	1	SSSC25064	3/8-16X1 SOC CAP
37	2	SSSC98056	10-32 X 7/8 SOC CAP
38	8	SSSCM6X16	M6-1.0 X 16 SOC CAP
39	2	TTH32416	HANDLE,THRD,1/4-20X1-1/8
40	8	WWFS1/4	WASHER FLAT, 1/4
41	2	WWFS3/8	WASHER, FLAT, 3/8
42	6	WWFS5/16	WASHER, FLAT, 5/16
43	2	WWFS10	WASHER, FLAT #10
44	14	WWL1/4	1/4 LW
45	4	WWL5/16	5/16 LW
46	2	WWL10	#10 LW

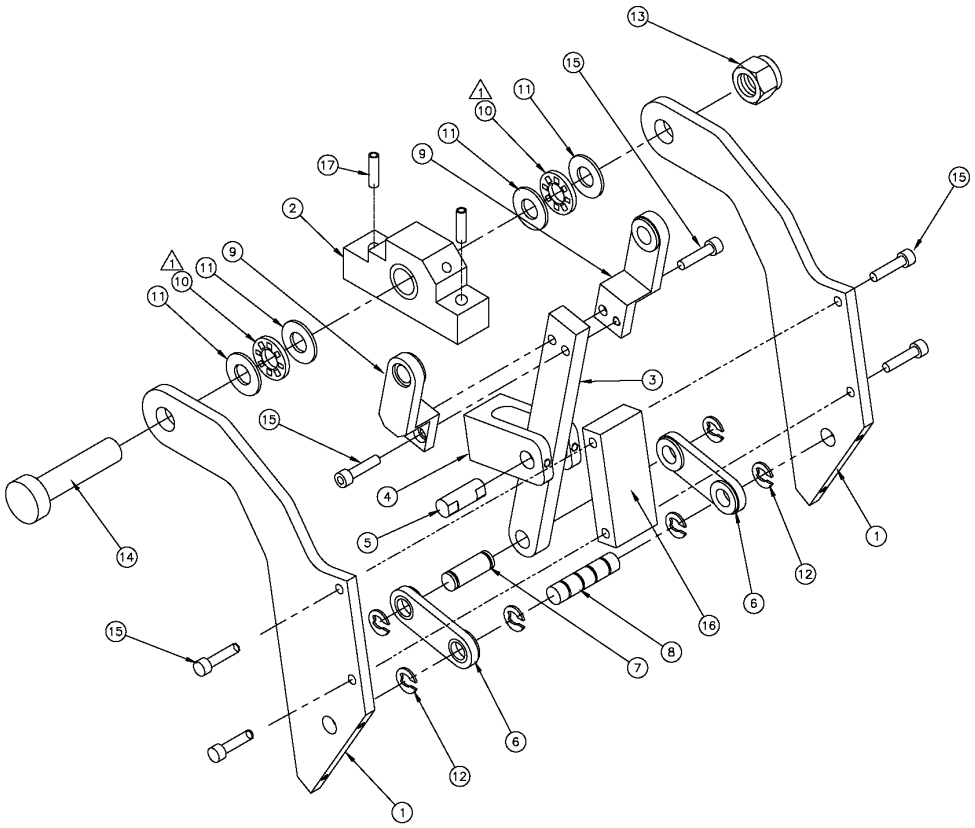

1335M-2300B Pivot Assembly

AAC Drawing Number 192985C Rev3

NO.	QTY	PART#	DESCRIPTION
1	2	1335M-2004A	PIVOT ARM
2	1	1335M-2007	PIVOT BLOCK
3	1	1335M-2009	DRIVE LINK
4	1	1335M-2010	PIVOT BLOCK
5	1	1335M-2011	PIVOT SHAFT
6	2	1335M-2012	SIDE LINK
7	1	1335M-2013	LINK SHAFT
8	1	1335M-2014	LINK SHAFT
9	2	1335M-2015	LINK YOKE
10	2	BBNTA815	THRUST BEARING
11	4	BBTRA815	THRUST WASHER
12	6	MM8407A134	E-RING
13	1	NNE3/8-16	ELASTIC LOCK NUT
14	1	SSAS032096	SCREW, SOCKET, SHOULDER 3/8-16 X 1 1/2
15	6	SSSC98048	SCREW, SOCKET, CAP 10-32 X 3/4
16	1	1335373	SPACER
17	2	IISO12X064	SPRING PIN 3/16 X 1

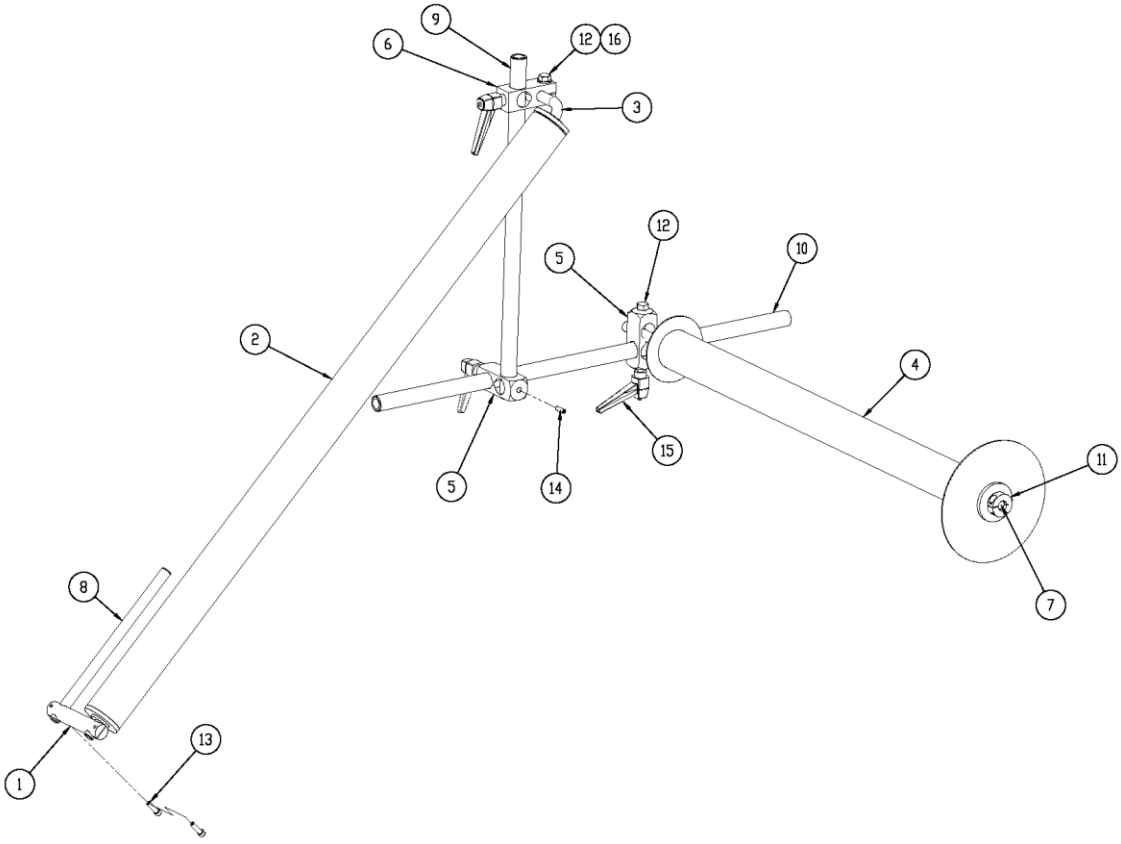

1335M-430E Guide Roller Assembly

AAC Drawing Number 9000912 Rev2

NO.	QTY	PART#	DESCRIPTION
1	1	1335-319B	ARM, 1/2" ROD CLAMP
2	1	1335-814E	ROLLER ASSY, 16 L, 2OD, .
3	1	1335-835E	ROD,BENT90DEG,1/2CRS,4X38
4	1	1335-838E	ROLLER ASSY W/FLANGE
5	2	28201	CROSS BLOCK, LARGE
6	1	28201A	CROSS BLOCK, LARGE
7	1	780-100	ROD,STRAIGHT,CRS,1/2
8	1	8732-0576	ROD, STRAIGHT, SS, 1/2 X
9	1	97-1711C	TUBE, 3/4 OD X 17.0L
10	1	97-1711E	TUBE, 3/4 OD X 24.0L
11	2	CCCL8F	CLAMP COLLAR- 1/2
12	2	SSHC10064	5/16-18 X 1 HHCS
13	2	SSSC95048	10-24 X 3/4, SOC CAP
14	1	"SSCUPSKT	0.19-32x0.625-HX-N"
15	3	TTH32425	HANDLE,THRDED,5/16-18X3/4
16	1	WWFS5/16	WASHER,FLAT,SAE,5/16

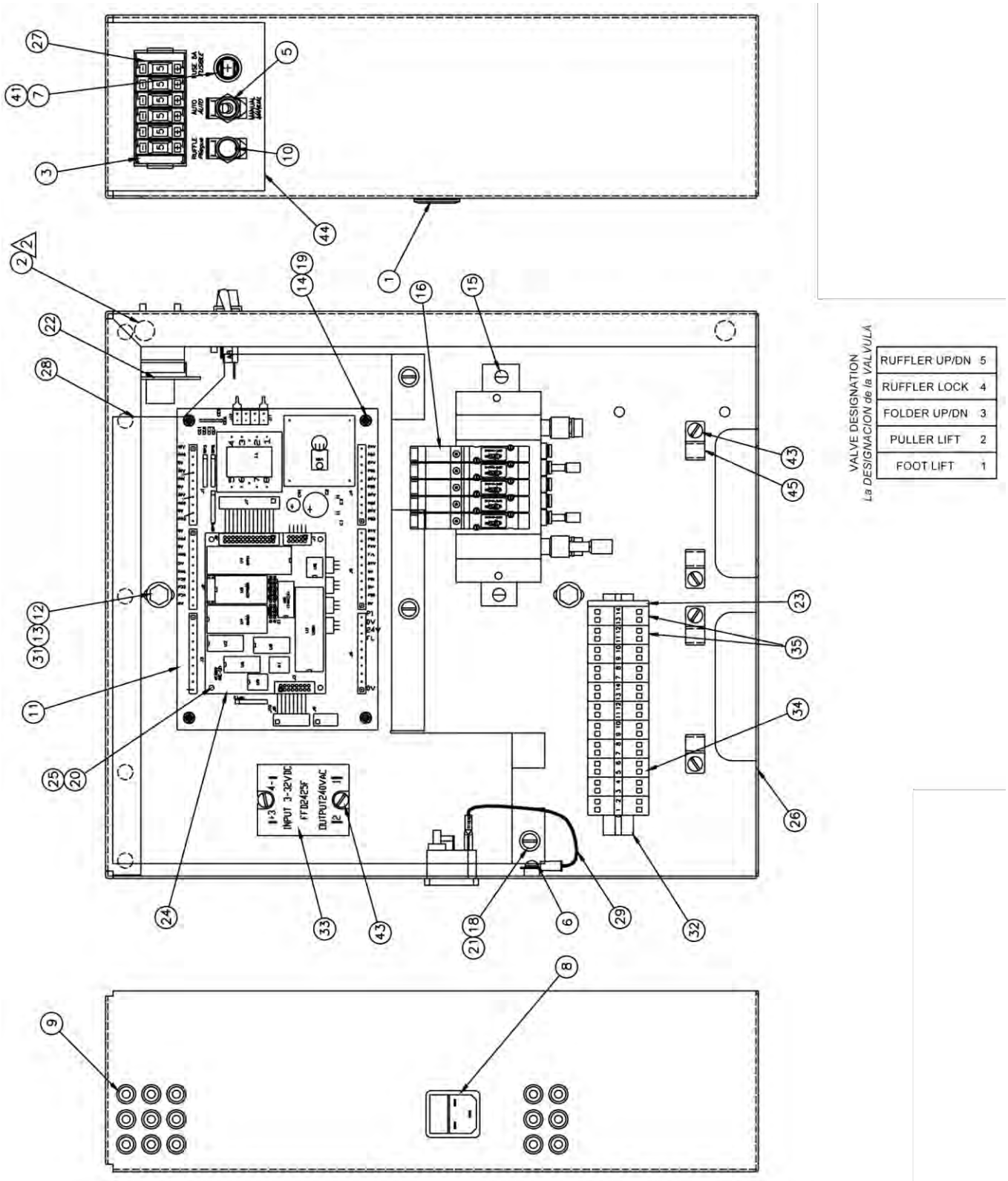
VALVE DESIGNATION
La DESIGNACION de la VALVULA
RUFFLER UP/DN 5
RUFFLER LOCK 4
FOLDER UP/DN 3
PULLER LIFT 2
FOOT LIFT 1

1335MF-500 Control Box Assembly

AAC Drawing Number 192909B Rev11

NO.	QTY	PART #	DESCRIPTION	NO.	QTY	PART #	DESCRIPTION
1	1	MM40450010	Slide Lock	28	1	1335M-501	Control Box Cover
2	2	MMSLD-ECH	Bumper	29	1	1981A-511	Ground Wire
3	1	FFC5S1	End Cap, Pair	30	1	EE7F3312	CEE Power Cord
4	1	1987149F3	Cable	31	2	WWFS1/4	Flat Washer SAE
5	1	FF2F385	Toggle Switch	32	1	FF264-3BKT6	Wago Mount
6	1	SSPS98016	Slotted Pan Screw	33	1	FFD2425F	Solid State Relay
7	1	FF342838A	Fuse Holder	34	9	FF264-341	Dual Wago, Grey
8	1	FF10ESB1C	Conn. Power Entry	35	2	FF264-347	Dual Wago, Grn
9	15	EESB-375-3	Heyco Bushing	36	1	FFRK44T-4	Eye Cable 12'
10	1	FF23F118	Push Button Switch	37	1	0211-703D	Puller Sync Cable
11	1	1987-149JC	PC Board	38	1	0211-705C	Treadle Cable
12	2	WWL1/4	Lock Washer	39	1	0211-705D	Remote Cable
13	2	SSHC01032	Hex Cap Screw	40	3	0411-1906B	Prox Switch Cable
14	4	SSPP80016	Pan HD Phillips Screw	41	1	FF313005	Slow Fuse, 5A
15	2	SSPS98032	Pan HD Slotted Screw	42	AR	SEE NEXT LEVEL	Wiring Diagram
16	1	AAE1335-5	Solenoid Assembly	43	6	SSPS90024	Pan Slotted Screw
17	1	1987-513A	Cable	44	AR	1335MF-LAB1	Control Box Lable
18	3	WWFS10	Washer SAE	45	4	AAF1/8	Plastic Clamps, 1/8"
19	4	FF67F4078	Threaded Spacer	46	1	AP-28-610UA	Cable, Jog/Dir/Enable
20	4	FF89F2609	Spacer	47	1	AP-28-612RA	Sync Cable Fl
21	3	SSPS98024	Pan HD Slotted Screw	48	1	FF250LA40A	MTL Oxide Varistor
22	1	1987-517	PC Board, THWL	49	6	SSPS90080	Pan Slotted Screw
23	1	FF264-371	End Cap Wago	50	2	1335-022	Cable, 3pin FM Molex
24	1	FF1035-02	PC Board, Isolation	51	1	1987149F5	Cable, Jumper
25	4	SSPP80096	Pan Phil. Screw	52	1	1987149F	Cable ribbon 26 Con.
26	1	1335M-505	Control Box Weldment	53	9	FF12F1042	Barrier Strip
27	6	FFC5.2LST1	Thumb Wheel Switches	54	AR	FF1024A-PGM	INS,FF1024A Pot Settings

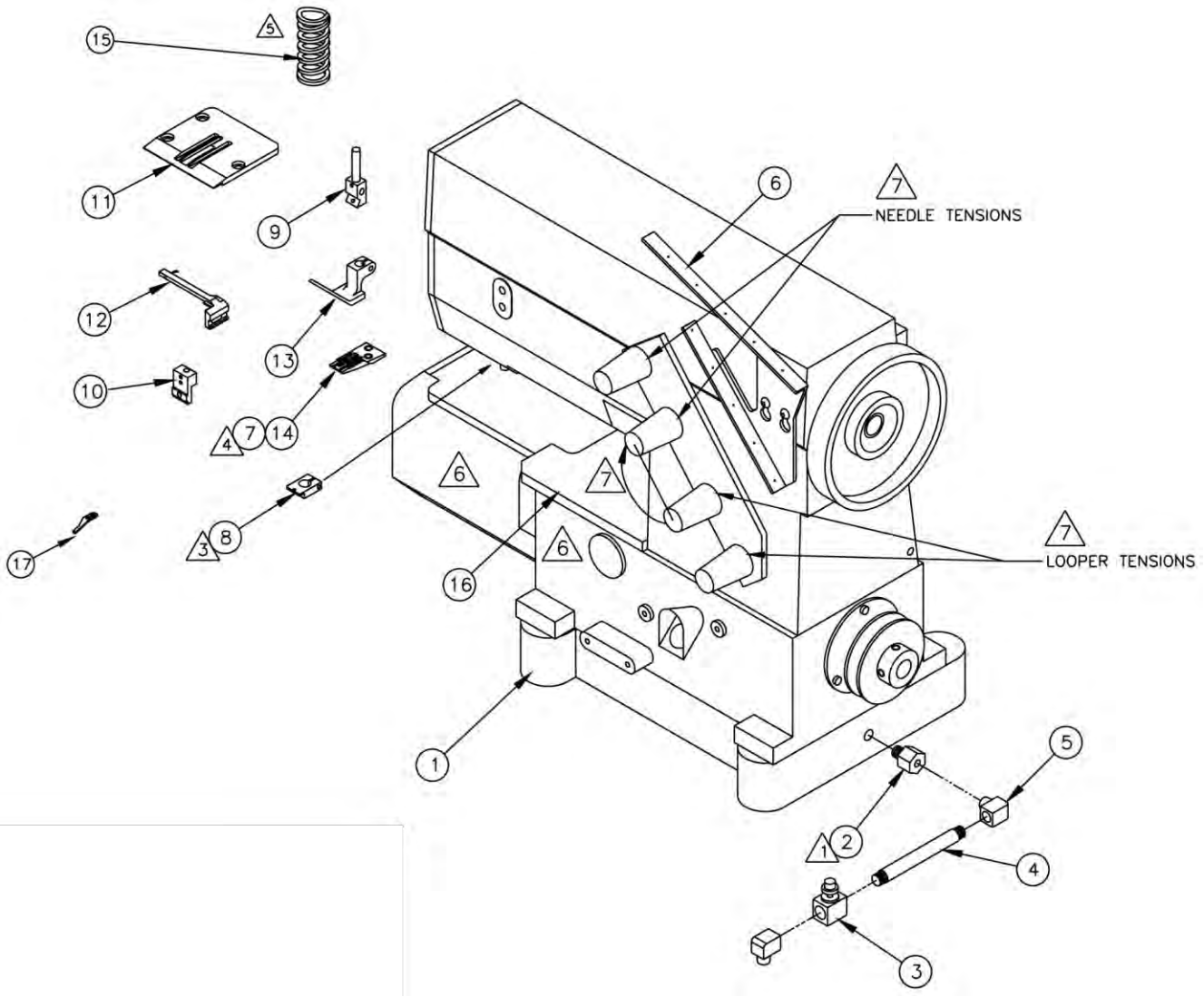
15
5
11
9
12
13
10
4
7
14
17
3
8
16
6
7
NEEDLE TENSIONS
6
7
6
7
LOOPER TENSIONS
1
5
1
2
4
3

1335MG-10 Sewing Head Assembly

AAC Drawing Number 192971C Rev6

NO.	QTY	PART #	DESCRIPTION
1	1	SYAM-MG2002P	Sewing Head
2	1	1335-109	Drain Plug Adapt.
3	1	AAF2305-2	Needle Valve
4	1	AAF4568K116	Pipe Nipple
5	2	AAF23400-2	Brass "L"
6	1	1325-013	Thread Guide
7	1	SSM200172	Loop Deflector Screw
8	1	1825N10S01	Thread Guide
9	1	1825N14S01	Needle Chuck
10	1	268602	Looper Holder
11	1	268614M	Throat Plate
12	1	281975	Spreader
13	1	M1Y88-003	Foot
14	1	M2Y88-002	Feed Dog
15	1	RRLC105J10	Spring
16	1	1335308	Plate
17	1	4209200M	Loop Guard

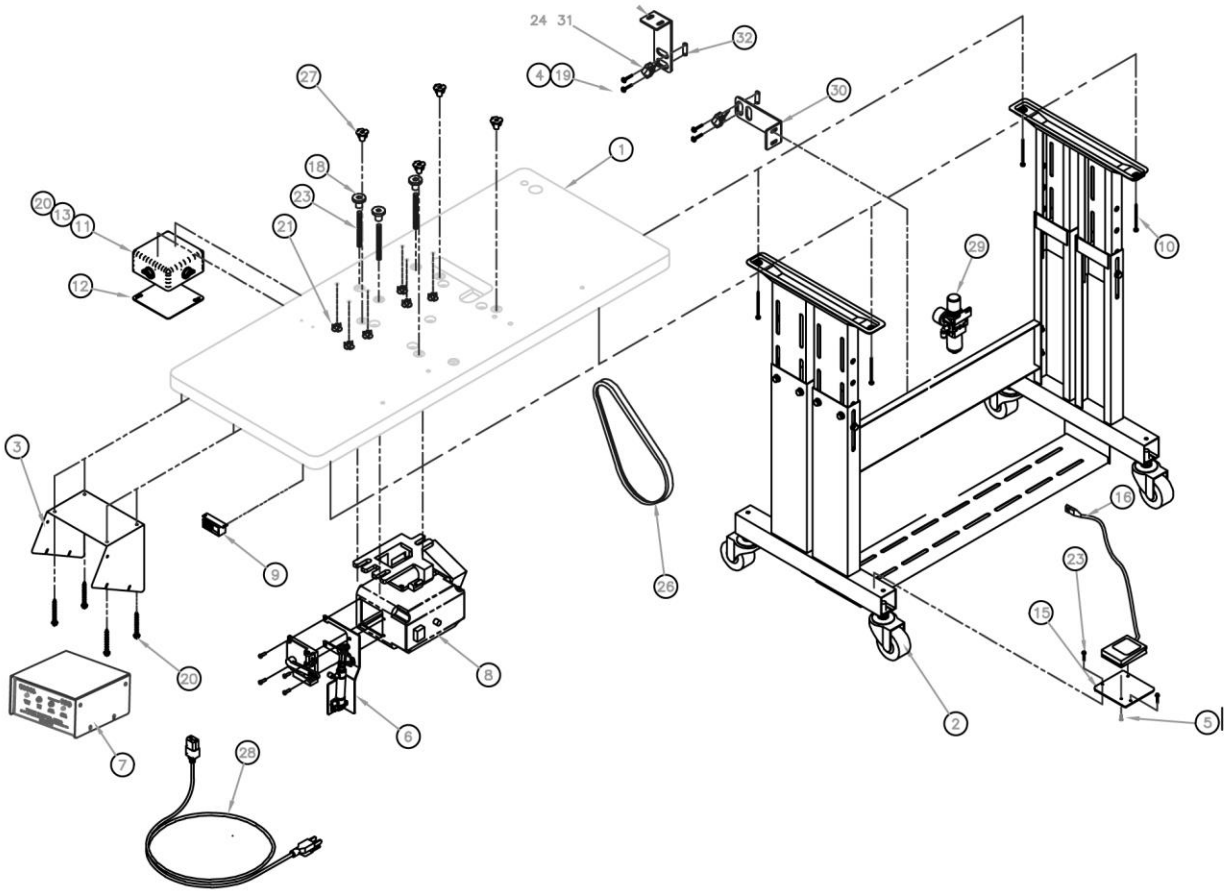
24 31
32
4 19
30
27
1
18
23
21
20 13 11
12
29
10
3
9
26
16
23
15
20
8
6
7
28
2
5

1959-700B Table and Frame Assembly

ACC Drawing Number 192981C Rev6

NO.	QTY	PART #	DESCRIPTION
1	1	1330222	TABLE TOP
2	1	K-4D	STAND
3	1	1959-120	MNT BRKT
4	4	WWF4	WASHER, #4
5	2	SSFS80016	Screw Flat Slotted 6-32x1/4
6	1	4059067	MOTOR LEVER ASSY
7	1	4000D2-500	CONTROL BOX
8	1	4058-3	MOTOR
9	1	T75	ON/OFF SWITCH
10	4	SSZH#10192	SCREW SHEET METAL #10x3
11	1	k-233	ELEC. BOX
12	1	K-234	COVER
13	3	K-235	ROMEX CONN
14	6	WWFS 1/4	FLAT WASHER SAE
15	1	1961-159	PLATE, FOOT PEDAL
16	1	EE24F163	FOOTSWITCH, TREADLITE
17	3	NNH5/16-18	HEX NUT
18	3	NNM103	RECESSED NUT
19	4	SSPS70048	Screw Pan Head Slotted 4-40x3/4
20	12	SSZH#10064	SCREW SHEET METAL #10x1
21	5	TTW1/4-20	THREADED INSERT
22	3	WWF5/16	FLAT WASHER SAE
23	3	010-054	THD ROD, 5/16-18 X 3.25L
24	2	FFRK44T-4	CABLE
25	3	WWL5/16	LOCK WASHER
26	1	ZX3836	BELT
27	4	TTIW3/8-16	RECESSED NUT
28	1	EE37F3311	POWER CORD
29	1	AA198-5102	AIR REGULATOR
30	2	1278-6689B	MOUNT, EYE
31	2	FFQSS18VN6AFF	EYE
32	2	1975-412A	NUT PLATE

4125

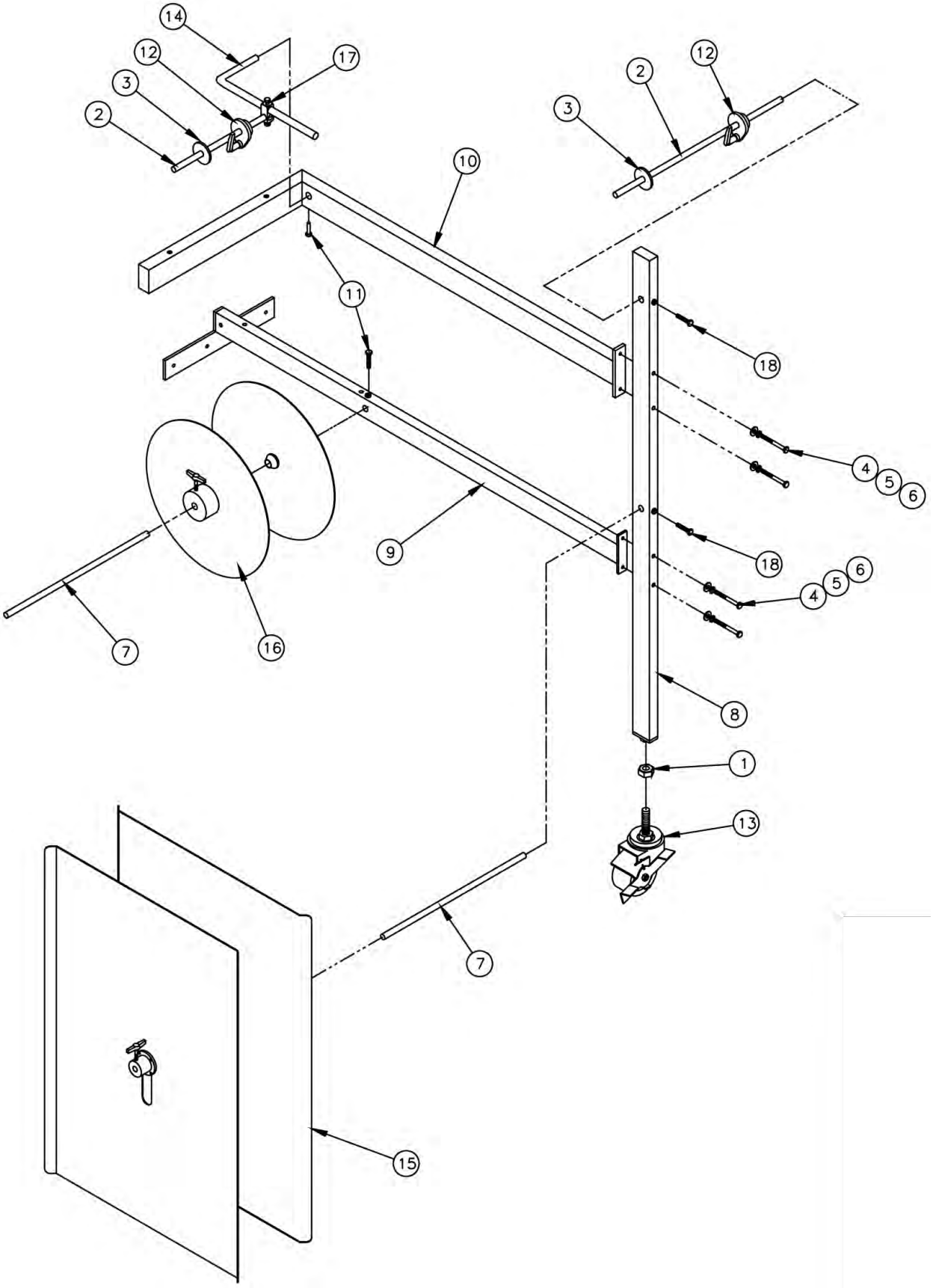
14
12
3
2
17
10
12
2
3
11
18
4
5
6
9
18
4
5
6
7
16
8
1
13
7
15

1959-800 Roll Holder Assembly

AAC Drawing Number 192739C Rev5

NO.	QTY	PART #	DESCRIPTION
1	1	NNH1/2-13	Hex Nut
2	2	1959-802	Rod,St,3/8x28
3	2	A-4-024	Hub
4	4	SSHC01160	Screw, Hex Cap
5	4	WWL1/4	Lock Washer
6	4	WWFS1/4	Flat Washer
7	2	1959-801	Rod, 1/2 x 28
8	1	1959-105	Tube Assy
9	1	1959-106	Tube w/ Flange
10	1	1312021	Material Frame Assy
11	2	SSHC01080	Screw, Hex Cap
12	2	4009-1	Material Ctrl
13	1	MM503022LB	Caster
14	1	780-102	Rod, L, 1/2 x 6 x 12
15	2	785-A95-36	Disc Assy
16	2	786B16-2.2	Disc & Cone Assy
17	1	A-U	Rod Conn.
18	2	SSHC10064	Screw, Hex Cap

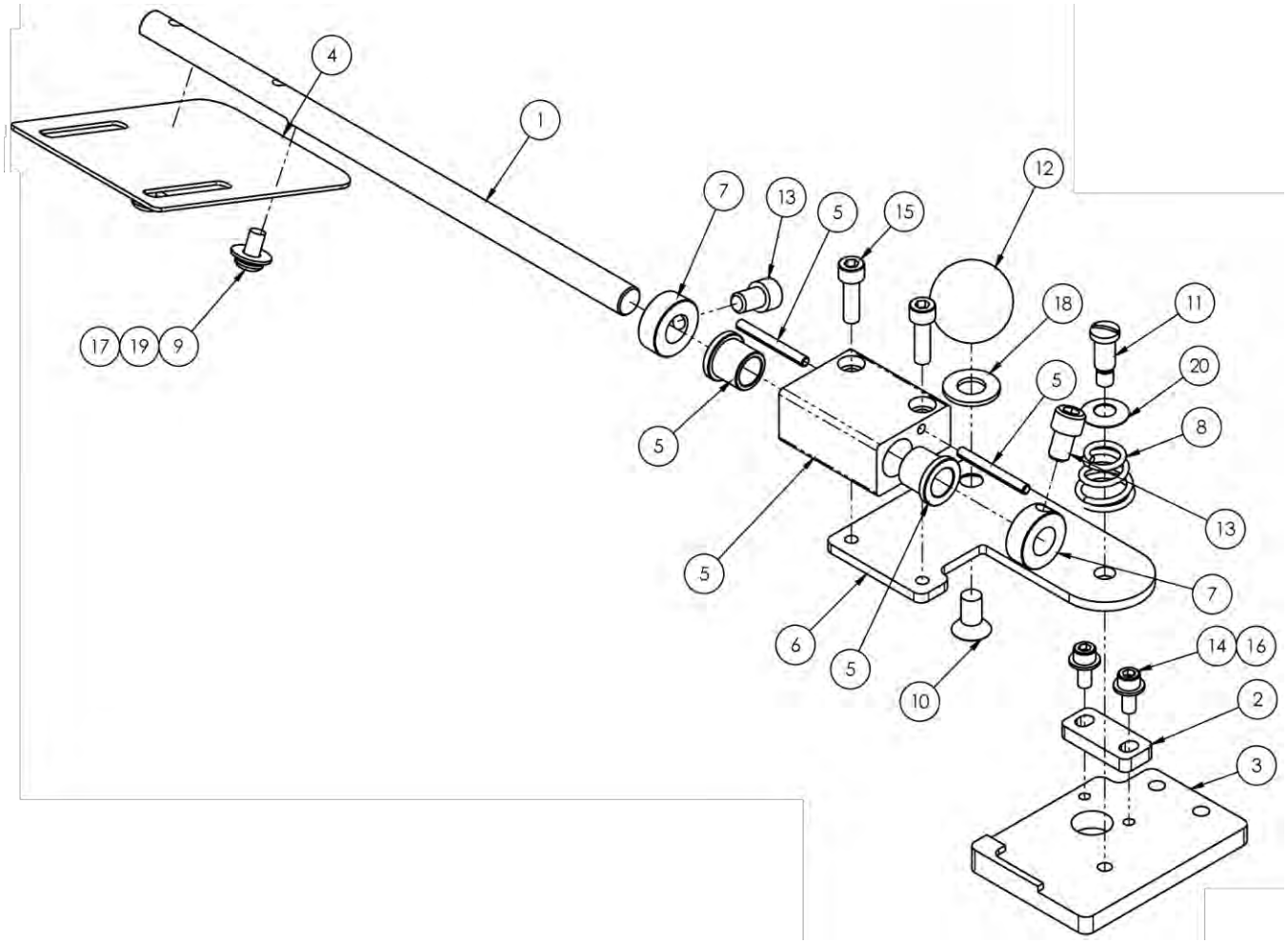

1335181 Stripper Blade Assembly

AAC Drawing Number 1335181 Rev2

NO.	QTY	PART #	DESCRIPTION	NO.	QTY	PART #	DESCRIPTION
1	1	1335154	PIVOT ROD, STRIP BLADE	11	1	SSM200246	SCREW,SHLDR,SLT.248X.437L
2	1	1335239	STOP BLK-STRIPPER BLADE	12	1	SSMBK13	KNOB,BLACK PLASTIC
3	1	1335305	MOUNT PLT, STRIPPER BLA	13	1	SSSC01024	1/4-20 X 3/8 SOC CAP SC
4	1	1335475	STRIPPER BLADE-1804P	14	2	SSSC90024	#8-32 X 3/8 SOC CAP SC
5	1	1335624	BLOCK, MOUNTING	15	2	SSSC98040	10-32 X 5/8 SOC CAP
6	1	1335627	MOUNT ARM, STRIPPER BLADE	16	2	WWF8	WASHER, FLAT, #8
7	2	CCSC6F3/8	COLLAR,SET 3/8	17	2	WWF10	WASHER, FLAT, #10, COM
8	1	RRBEEHIVEH	SPRING,HEAVY BEEHIVE	18	1	WWFS5/16	WASHER,FLAT,SAE,5/16
9	2	SSBC98024	10-32 X 3/8 BUTTON CAP SC	19	2	WWL10	WASHER,LOCK,#10
10	1	SSFC01032	1/4-20 X 1/2 FLAT ALN CAP	20	1	WWS307-1	WASHER,SPRING,BELVEL

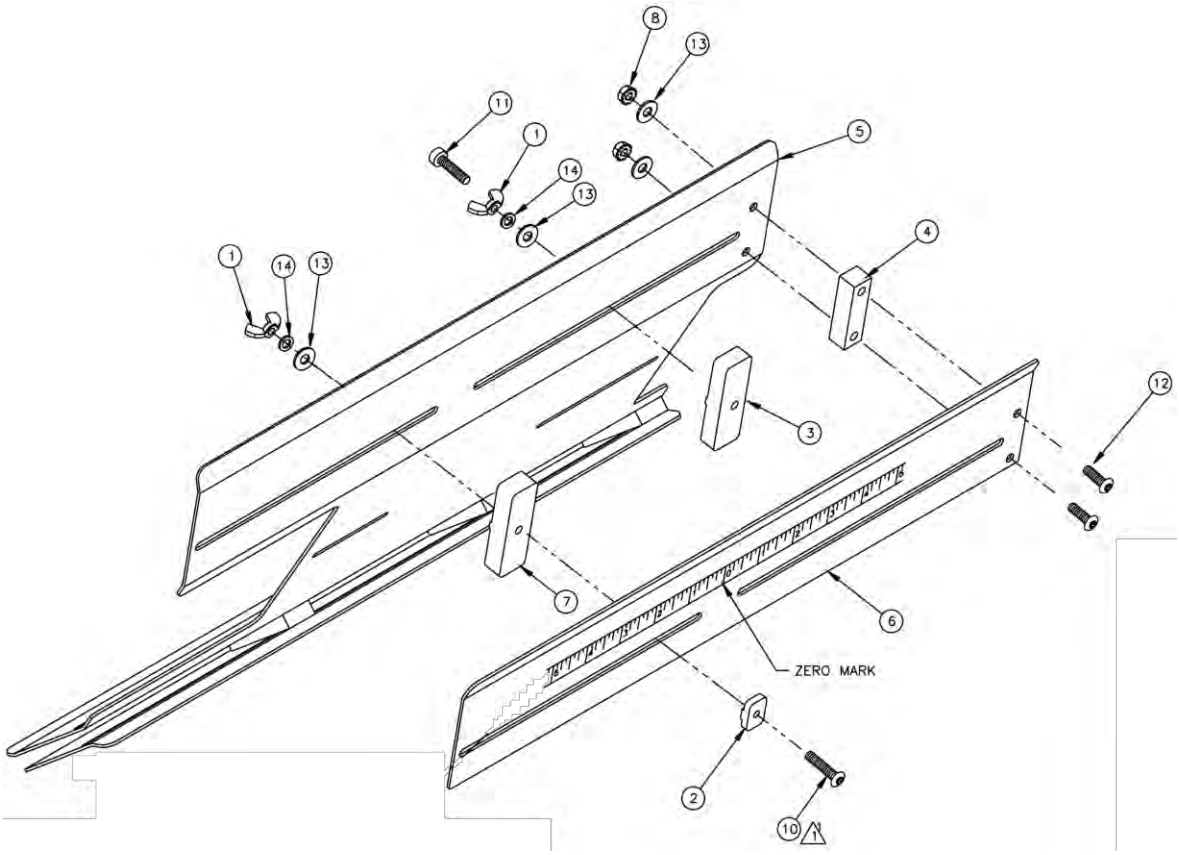

A-2216L5/16 Euro. Folder w/ Flange

AAC Drawing Number 192823C Rev3

NO.	QTY	PART #	DESCRIPTION
1	6	NNW10-32	Wing Nut
2	2	A-2216D22	T-Nut
3	2	A-2216D53	Spacer, 1/4
4	2	A-2216G29	Spacer, 5/16
5	1	A-2216L02	Folder Plate
6	2	A-2216L04	Folder Top
7	2	A-2216D34	Guide, 5/16
8	4	NNK10-32	Kep Nut
10	2	SSBC98064	Screw, Button Cap
11	2	SSSC90040	Screw, Socket Cap
12	6	SSBC98048	Screw, Button Cap
13	8	WWFS10	Flat Washer
14	8	WWL10	Lock Washer
15	AR	1335A-302	Rule Label
16	2	A-2216D37	Left Folder Guide
17	2	A-2216D55	Folder Guide
18	2	A-2216G30	Folder Spacer
19	2	SSBC98056	Button Cap Screw

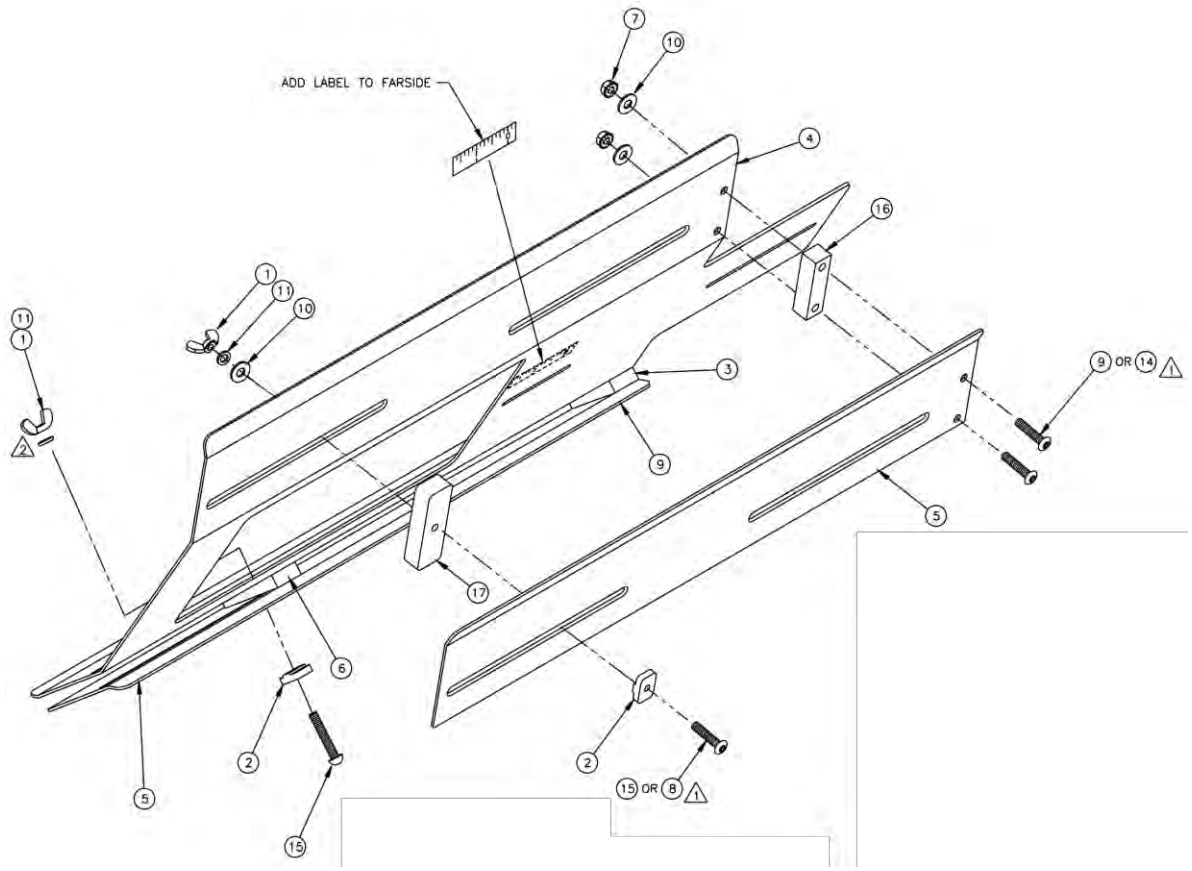

A-2216M5/16 Continental Book Folder

AAC Drawing Number 192824C Rev6

NO.	QTY	PART #	DESCRIPTION
1	2	NNW10-32	Wing Nut
2	2	A-2216D22	T-Nut
3	1	A-2216G29	Spacer, 5/16
4	1	A-2216M02	Folder Plate
5	2	A-2216M04	Folder Top
6	1	A-2216D34	Guide, 5/16
7	4	NNK10-32	Kep Nut
8	1	SSBC98064	Screw, Button Cap
9	4	SSBC98048	Screw, Button Cap
10	5	WWFS10	Flat Washer
11	2	WWL10	Lock Washer
12	1	A-2216G34	Spacer, 9/16
13	1	A-2216D39	Guide, 9/16
14	2	SSBC98056	Button Cap Screw
15	2	SSBC98072	Button Cap Screw
16	1	A-2216G30	Spacer, 7/16
17	1	A-2216D37	Guide, 7/16

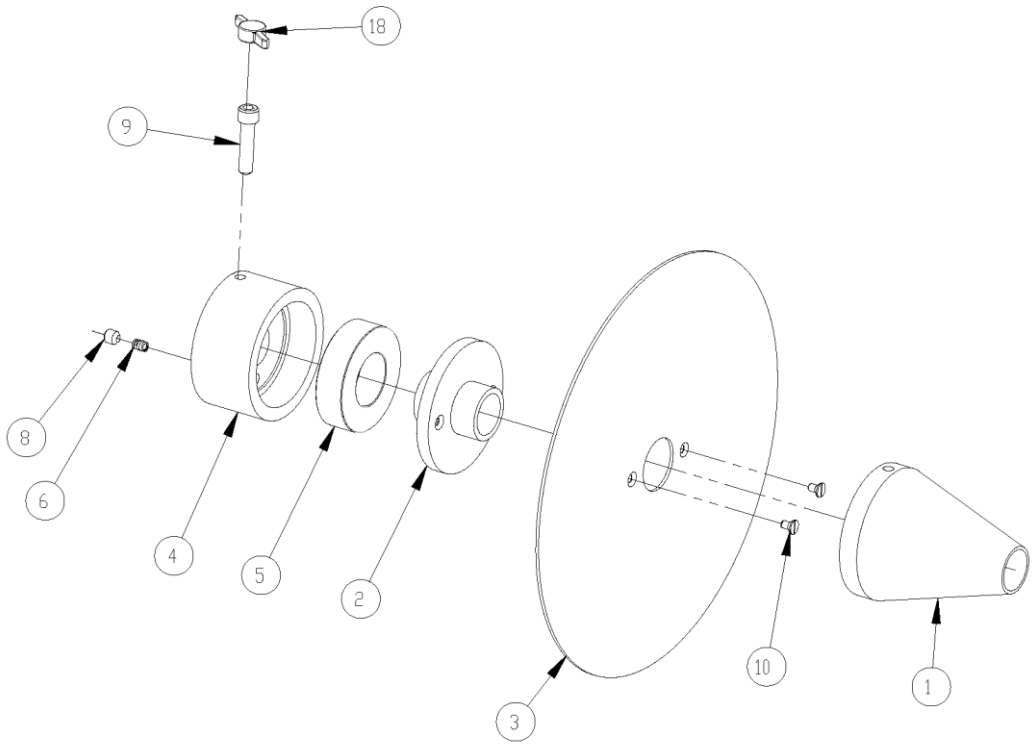

33008708 Ball Bearing Disc Assembly

AAC Drawing Number 9000904 Rev 4

NO.	QTY	PART#	DESCRIPTION
1	1	33008604	CONE, SPOOL
2	1	33008602	HUB, FLANGE 3/4 BORE
3	1	SEE CHART	SEE CHART
4	1	33008601	HUB, CENTER, 3/4 SHAFT
5	1	BB23216-88	BEARING,BALL,1.0B
6	1	RRLC026B1	SPRING,COMP .026X.18X.25
7	1	JJ012	3/16" STAINLESS BALL
8	1	SSSP01016	1/4-20 X 1/4 NYLOCK
9	1	SSSC01064	1/4-20 X 1 SOC CAP
10	2	SSFS80016	6-32 X 1/4, FLAT SLOT

-	BALL BEARING	DISC ASSEMBLY	33008732
3	1	33008632	DISC 32" DIA
-	BALL BEARING	DISC ASSEMBLY	33008724
3	1	33008624	DISC 24" DIA
-	BALL BEARING	DISC ASSEMBLY	33008716
3	1	33008616	DISC 16" DIA
-	BALL BEARING	DISC ASSEMBLY	33008708
18	1	SSW#1/4	WING SCREW KNOB

1959-PD Pneumatic Diagram

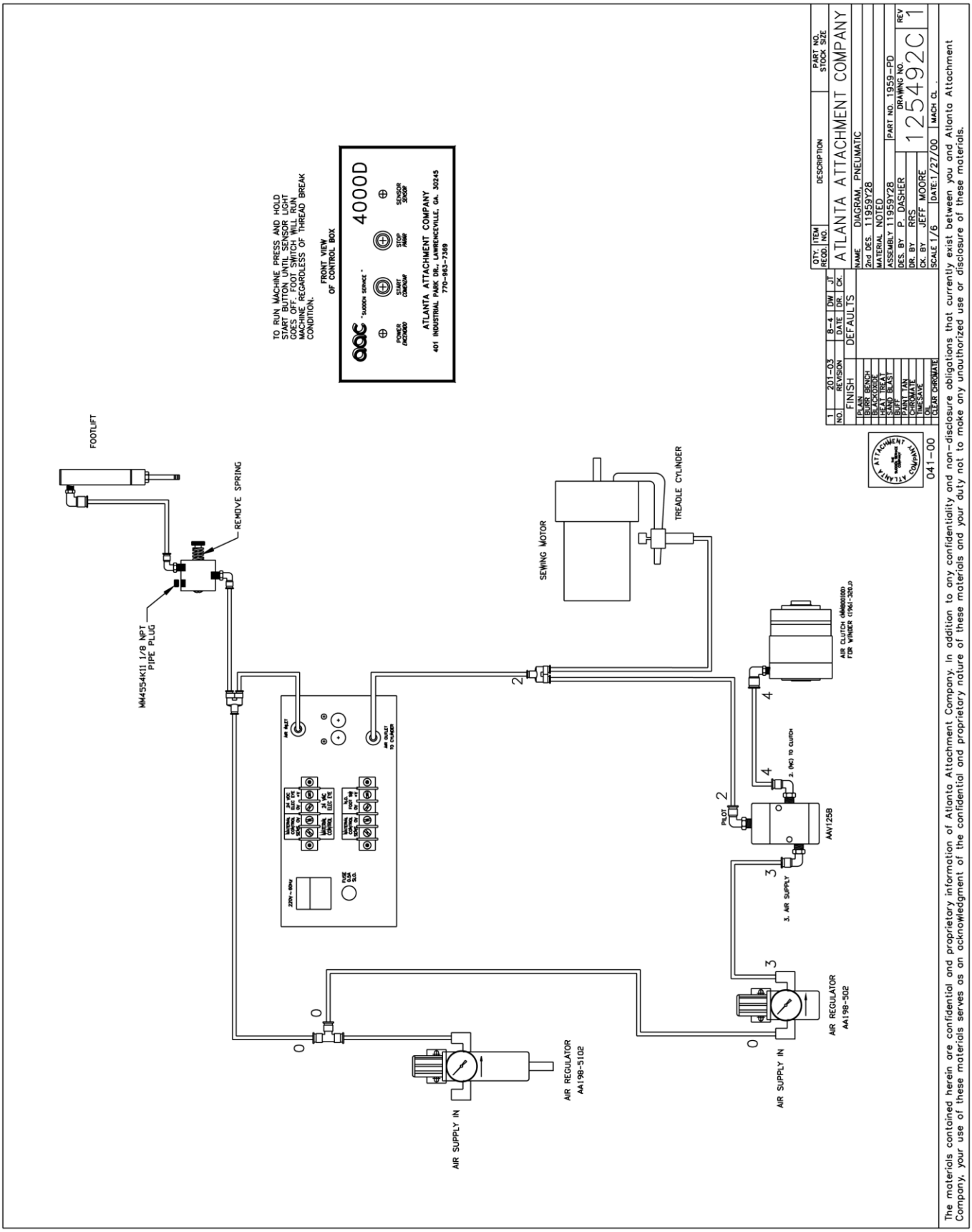

1335MF-PD Pneumatic Diagram

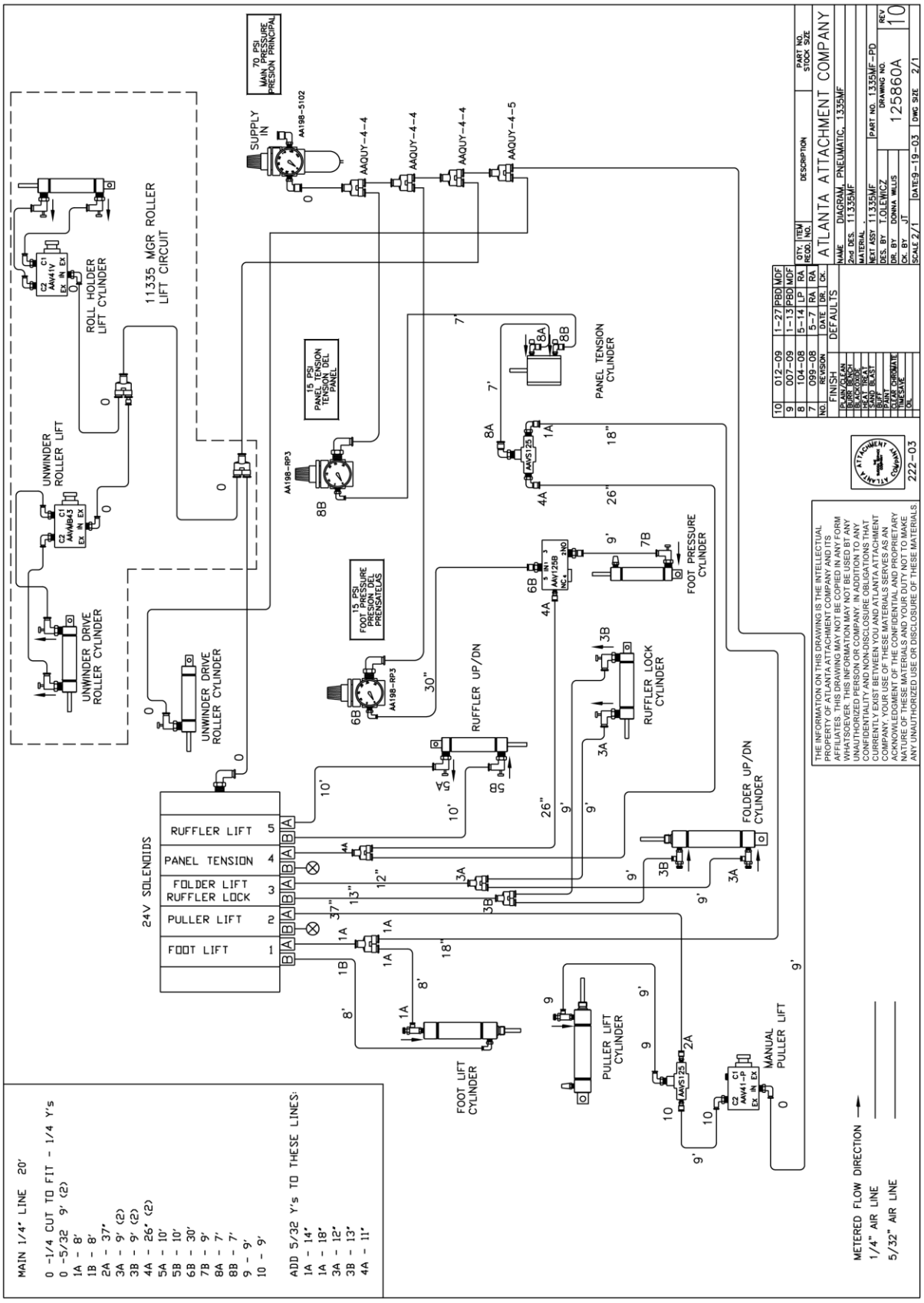

1334S-02WD Wiring Diagram

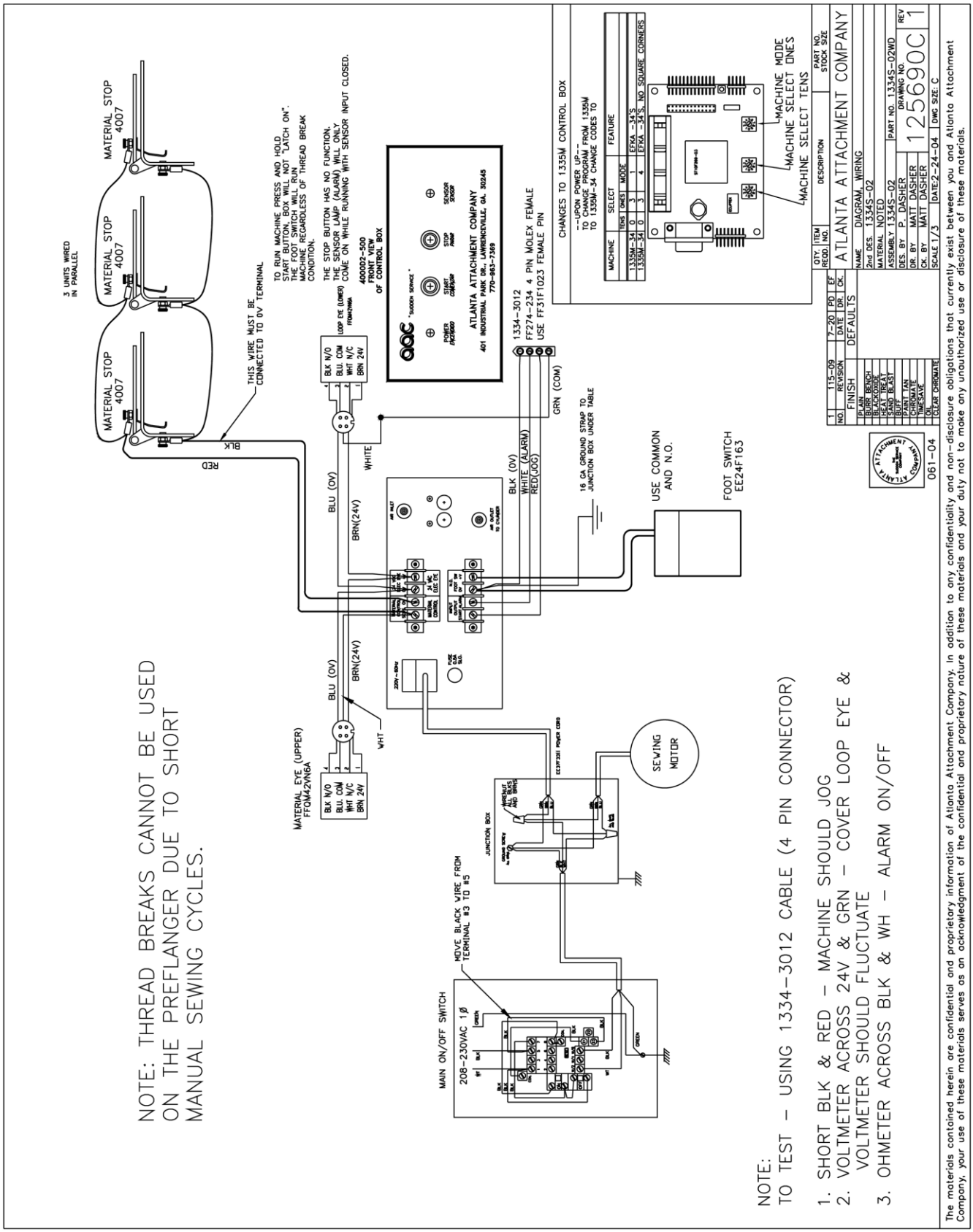

1335MF-WD Wiring Diagram

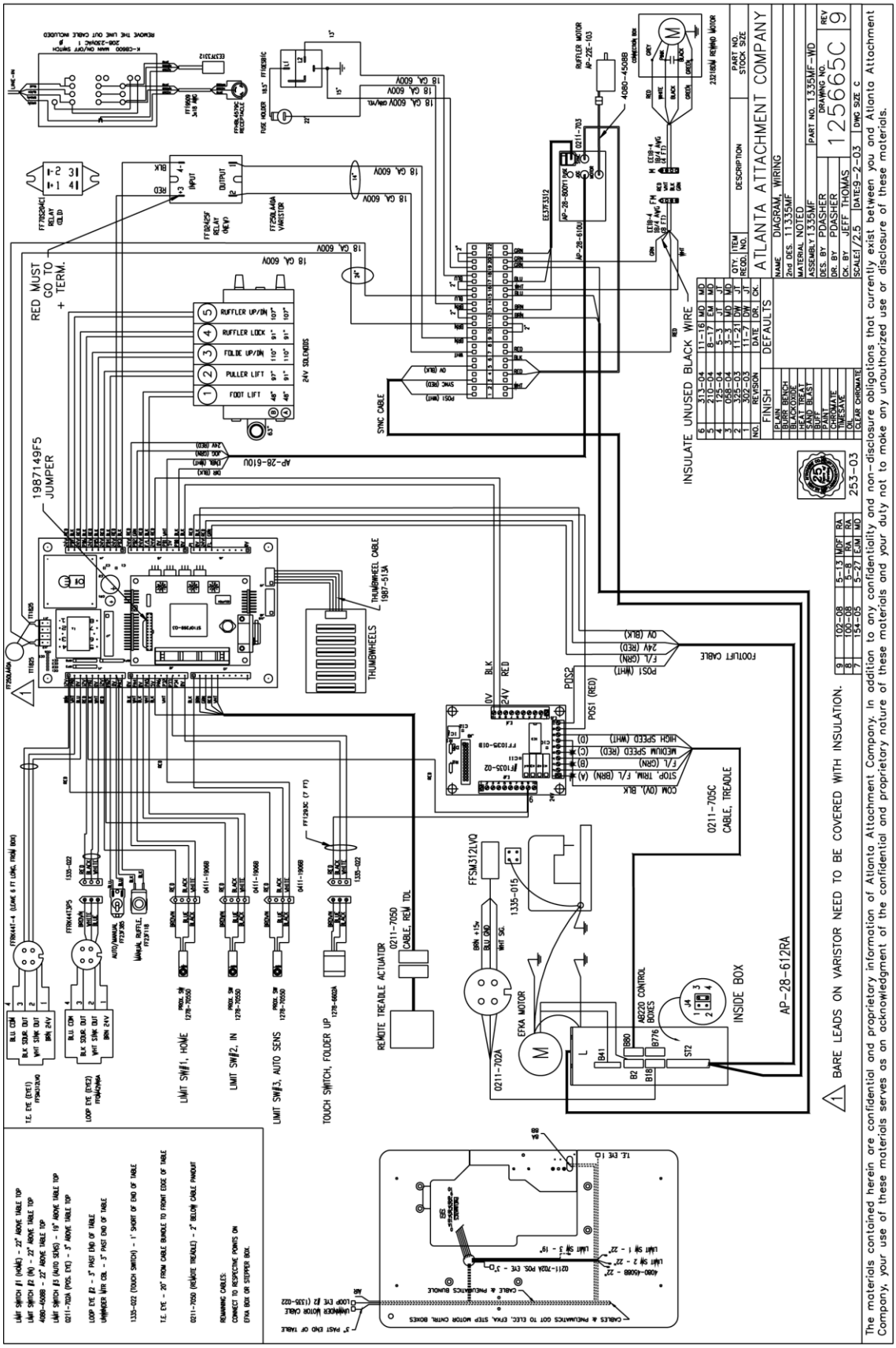

1335MFC-34WD2 Wiring Diagram

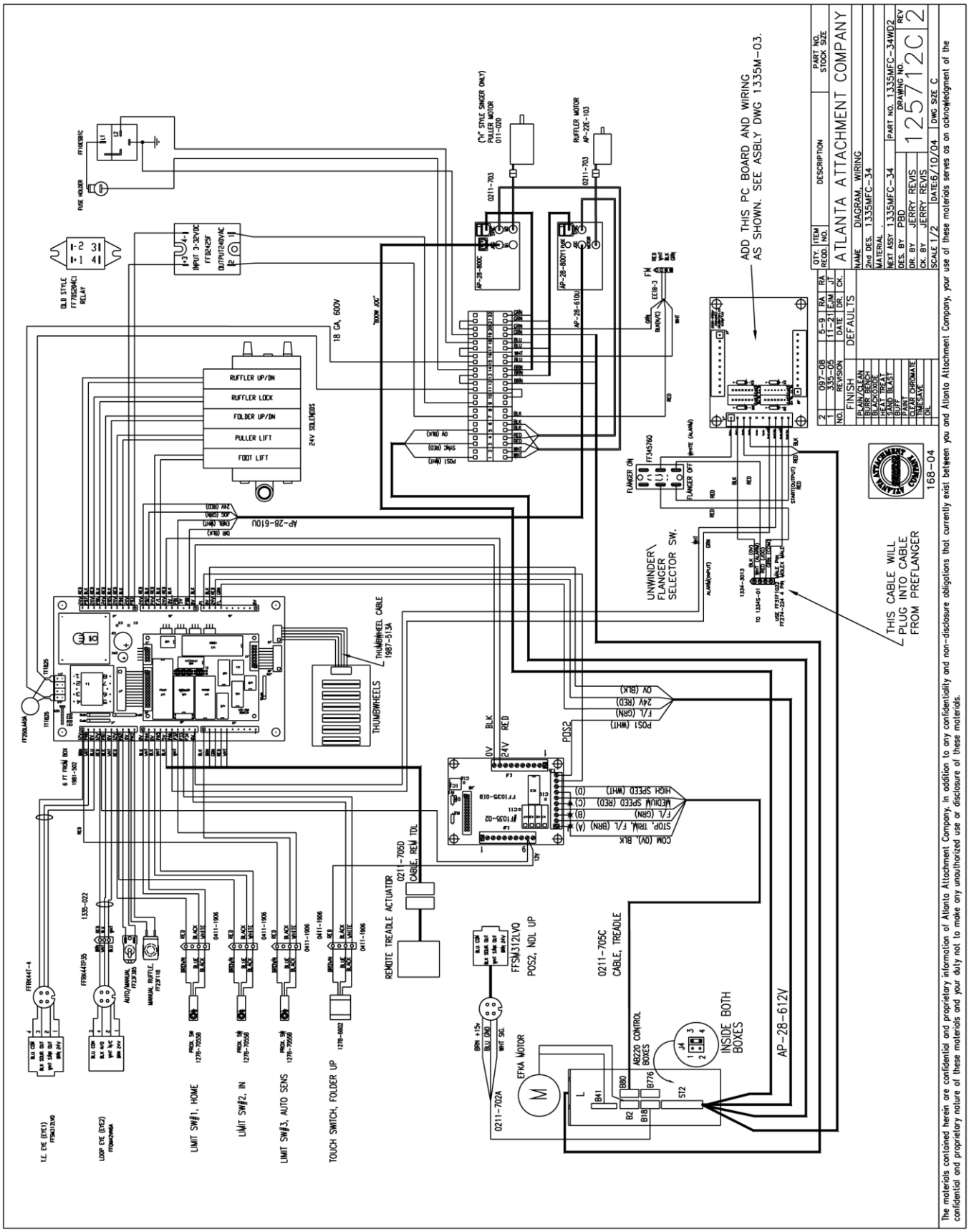

1335MGR-WD Wiring Diagram

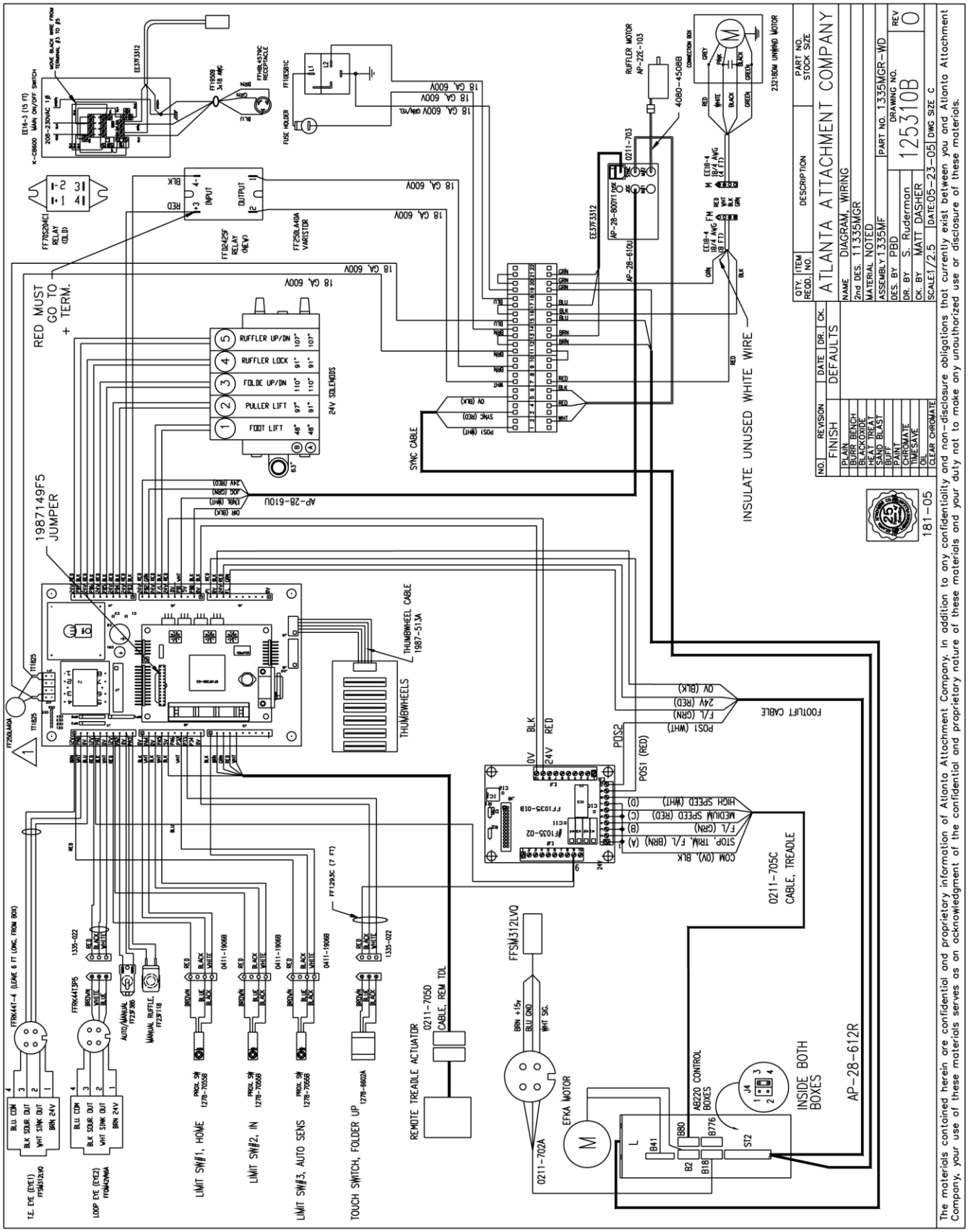

Atlanta Attachment Company (AAC) Statement of Warranty

Manufactured Products

Atlanta Attachment Company warrants manufactured products to be free from defects in material and workmanship for a period of eight hundred (800) hours of operation or one hundred (100) days whichever comes first. Atlanta Attachment Company warrants all electrical components of the Serial Bus System to be free from defects in material or workmanship for a period of thirty six (36) months.

Terms and Conditions:

- AAC Limited Warranty becomes effective on the date of shipment.
- AAC Warranty claims may be made by telephone, letter, fax or e-mail. All verbal claims must be confirmed in writing.
- AAC reserves the right to require the return of all claimed defective parts with a completed warranty claim form.
- AAC will, at its option, repair or replace the defective machine and parts upon return to AAC.
- AAC reserves the right to make the final decision on all warranty coverage questions.
- AAC warranty periods as stated are for eight hundred (800) hours or one hundred (100) days whichever comes first.
- AAC guarantees satisfactory operation of the machines on the basis of generally accepted industry standards, contingent upon proper application, installation and maintenance.
- AAC Limited Warranty may not be changed or modified and is not subject to any other warranty expressed or implied by any other agent, dealer, or distributor unless approved in writing by AAC in advance of any claim being filed.

What Is Covered

- Electrical components that are not included within the Serial Bus System that fail due to defects in material or workmanship, which are manufactured by AAC are covered for a period of eight hundred (800) hours.
- Mechanical parts or components that fail due to defects in material or workmanship, which are manufactured by AAC.
- Purchased items (sewing heads, motors, etc.) will be covered by the manufacturers (OEM) warranty.
- AAC will assist in the procurement and handling of the manufacturers (OEM) claim.

What Is Not Covered

- Parts that fail due to improper usage, lack of proper maintenance, lubrication and/or modification.
- Damages caused by; improper freight handling, accidents, fire and issues resulting from unauthorized service and/or personnel, improper electrical, plumbing connections.
- Normal wear of machine and parts such as Conveyor belts, "O" rings, gauge parts, cutters, needles, etc.
- Machine adjustments related to sewing applications and/or general machine operation.
- Charges for field service.
- Loss of time, potential revenue, and/or profits.
- Personal injury and/or property damage resulting from the operation of this equipment.

Declaración de Garantia

Productos Manufacturados

Atlanta Attachment Company garantiza que los productos de fabricación son libres de defectos de mate-rial y de mano de obra durante un periodo de ochocientos (800) horas de operación o cien (100) días cual llegue primero. Atlanta Attachment Company garantiza que todos los componentes del Serial bus son libres de defectos de material y de mano de obra durante un periodo de treinta y seis (36) meses.

Términos y Condiciones:

- La Garantía Limitada de AAC entra en efecto el día de transporte.
- Reclamos de la Garantía de AAC pueden ser realizados por teléfono, carta, fax o correo electrónico. Todo reclamo verbal tiene que ser confirmado vía escrito.
- AAC reserva el derecho para exigir el retorno de cada pieza defectuosa con un formulario de reclamo de garantía.
- AAC va, según su criterio, reparar o reemplazar las máquinas o piezas defectuosas devueltas para AAC.
- AAC reserva el derecho para tomar la decisión final sobre toda cuestión de garantía.
- Las garantías de AAC tiene una validez de ochocientas (800) horas o cien (100) días cual llega prim-ero.
- AAC garantiza la operación satisfactoria de sus máquinas en base de las normas aceptadas de la industria siempre y cuando se instale use y mantenga de forma apropiada.
- La garantía de AAC no puede ser cambiado o modificado y no está sujeto a cualquier otra garantía implicado por otro agente o distribuidor menos al menos que sea autorizado por AAC antes de cual-quier reclamo.

Lo Que Está Garantizado

- Componentes eléctricos que no están incluidos dentro del sistema Serial Bus que fallen por defectos de materiales o de fabricación que han sido manufacturados por AAC son garantizados por un peri-odo de ochocientas (800) horas.
- Componentes mecánicos que fallen por defectos de materiales o de fabricación que han sido manu-facturados por AAC son garantizados por un periodo de ochocientas (800) horas.
- Componentes comprados (Motores, Cabezales,) son protegidos debajo de la garantía del fabricante.
- AAC asistirá con el manejo de todo reclamo de garantía bajo la garantía del fabricante.

Lo Que No Está Garantizado

- Falla de repuestos al raíz de uso incorrecto, falta de mantenimiento, lubricación o modificación.
- Daños ocurridos a raíz de mal transporte, accidentes, incendios o cualquier daño como resultado de servicio por personas no autorizados o instalaciones incorrectas de conexiones eléctricas o neumáti-cas.
- Desgaste normal de piezas como correas, anillos de goma, cuchillas, agujas, etc.
- Ajustes de la máquina en relación a las aplicaciones de costura y/o la operación en general de la máquina.
- Gastos de Reparaciones fuera de las instalaciones de AAC
- Pérdida de tiempo, ingresos potenciales, y/o ganancias.
- Daños personales y/o daños a la propiedad como resultado de la operación de este equipo.

Atlanta Attachment Company
362 Industrial Park Drive
Lawrenceville, GA 30046
770-963-7369
www.atlatt.com

Printed in the USA